規格 Spec. / 型號 Model	楔心行程 mm Plunger Stroke	爪行程(直徑)mm Jaw Stroke (Dia.)	夾持直徑 Chucking Dia. mm 外徑 mm	夾持直徑 Chucking Dia. mm 內徑 mm	容許油壓缸推力 kgf Max D.B. pull	最大夾持力 kgf Max clamping force	最高迴轉數 r.p.m. Max speed	I kg·m²	重量 kg Weight	補償量 mm Compensation	客戶確認 Confirmed
3RF-10D	50	11	85	25	4500	6873	3500	0.56	67.5	±1	

*訂購時請將圖面連同訂單一併回傳. *Please send back with order while ordering.

注意:

1.標示[*]之寸法為內拉桿製作之尺寸.請勿任意更動.
2.內拉桿推力為雙桿型油壓缸後缸活塞面積x使用油壓壓力
3.中心頂針會隨著夾持直徑與工件中心孔變化

Notice:

1.The dimensions marked with [*] are the dimensions of the inner draw tube. Please do not change them without permission.
2.The inner draw tube thrust is the piston area of the rear cylinder of the double rod hydraulic cylinder multiples the hydraulic pressure applied.
3.The center thimble will be changed based on the clamping diameter and the center hole of the workpiece.

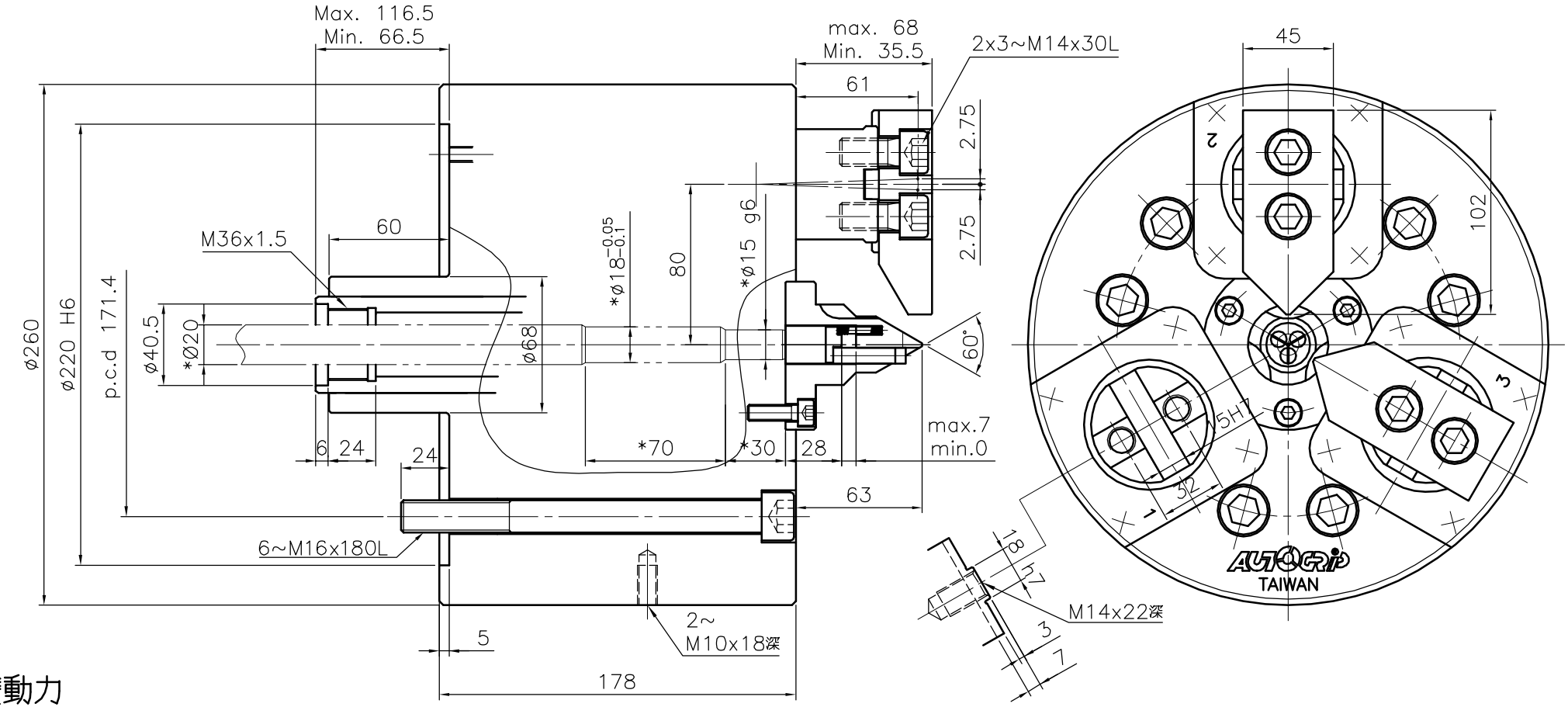

雙動力
軸用車削三爪夾頭

Retractable-Jaw 3-jaw Shaft Chuck

*為確保產品品質日益精進,敝公司擁有設計變更之權.

*Subject to technical changes.

佳賀精機股份有限公司
AUTOGRIP MACHINERY CO., LTD.

A3	版本		品號		製圖		日期	2025-06-17	檔 案	\CHK\CF-3RF-10D