3H-2/3H-2A LARGE THRU-HOLE POWER CHUCK

- WEDGE-HOOK type 3-jaw with the extra large through-hole.
- Matching surfaces of all parts hardened, ground and lubricated directly.
- High rigidity and high clamping accuracy.

■ J is the hole diameter of blank draw nut.
If not notified, AUTOGRIP will adopt the K Default as K value.
K is the maximum thread specification and it could be customize.

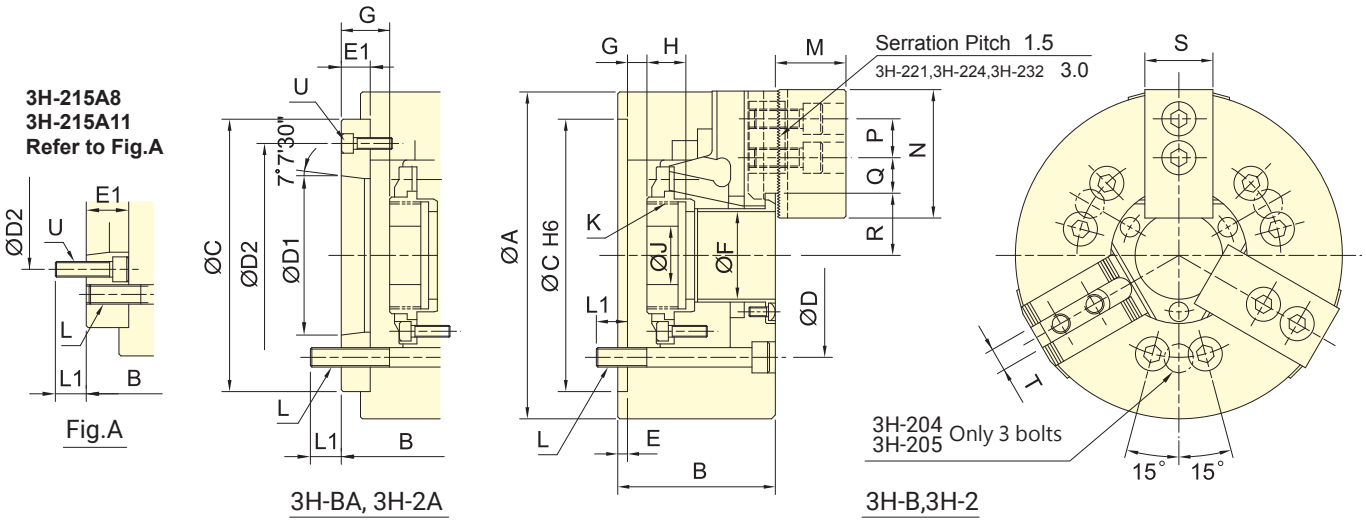

Subject to technical changes

SPECIFICATIONS

Model		Plunger stroke	Jaw stroke (Dia.)	Chucking Dia. Max.	Chucking Dia. Min.	Max. D.B. pull	Max. Clamping force	Max. speed	Moment of inertia	Weight		Matching cyl.	Max. pressure
		mm	mm	mm	mm	kN (kgf)	kN (kgf)	min^{-1} (r.p.m.)	kg・m^2	kg			MPa (kgf/cm^2)
3H-204	A4	13	5.5	113	7	13.7(1400)	36.0(3670)	8000	0.012	4.22	5.34	TK-A528	2.0(20)
3H-205	A4	13	5.5	138	10	17.2(1750)	48(4890)	7000	0.02	6.3	7.1	TK-A533	2.5(25)
3H-206	A5	14	6	170	13	23.3(2375)	66.8(6810)	6000	0.06	13.1	14.9	TK-A646	2.5(25)
3H-208	A6	18	7.6	210	17	31.9(3250)	95.7(9760)	5000	0.15	21.8	23.4	TK-A853	2.6(26)
3H-210	A8	21	8.9	260	37	49.1(5010)	152(15500)	4500	0.32	37.5	43	TK-A1075	3.2(32)
3H-212	A11	25	10.6	315	43	58.8(6000)	157(16010)	3700	0.74	58.6	64.7	TK-A1512	1.9(19)
3H-215	A8	25	10.6	405	49	71(7240)	180(18350)	2500	2.8	127	149	TK-2114	2.1(21)
3H-215	A11	25	10.6	405	49	71(7240)	180(18350)	2500	2.8	127	143.3	TK-2114	2.1(21)
3H-215	A15	25	10.6	405	49	71(7240)	180(18350)	2500	2.8	127	135.6	TK-2114	2.1(21)
3H-18B	A15	23	10.6	456	79	71(7240)	180(18350)	2000	4.8	162.4	173.4	TK-2416	1.9(19)
3H-221	A15	28	12.9	530	105	90(9175)	234(23860)	1800	7.5	223	234	TK-2416	2.4(24)
3H-224	A20	28	12.9	610	135	100(10200)	240(24500)	1500	15.8	270	284	TK-2820	2.1(21)
3H-232	A20	34	18	800	205	100(10200)	240(24500)	1200	47	546	560	TK-2820	2.1(21)

The dimensions and the specifications of 3H-2A,3H-BA type are in red data.

3H-2/3H-2A LARGE THRU-HOLE POWER CHUCK

DIMENSIONS

Model		A	B		C	D	D1	D2	E	E1	F	G max.		G min.		H	J
3H-204	A4	113	59	83	85	70.6	63.51	82.6	4	28	32	3.5	31.5	-9.5	18.5	17.5	12
3H-205	A4	138	60	71	110	82.6	63.51	96	4	15	39	1	16	-12	3	20	12
3H-206	A5	170	81	91	140	104.8	82.56	116	5	15	53	13	28	-1	14	17.5	20
3H-208	A6	210	91	103	170	133.4	106.38	150	5	17	66	16.5	33.5	-1.5	15.5	20	30
3H-210	A8	260	102	115	220	171.4	139.72	190	5	18	86	10.5	28.5	-10.5	7.5	25	45
3H-212	A11	315	110	126	300	235	196.87	260	6	22	106	10	32	-15	7	28	50
3H-215	A8	405	132	159	380	330.2	139.72	171.4	6	33	145	11	44	-14	19	39	60
3H-215	A11	405	132	166	380	330.2	196.87	235	6	40	145	11	51	-14	26	39	60
3H-215	A15	405	132	153	380	330.2	285.78	330.2	6	27	145	11	38	-14	13	39	60
3H-18B	A15	456	145	166	380	330.2	285.78	330.2	6	27	165	18	45	-5	22	40	60
3H-221	A15	530	140	161	380	330.2	285.78	330.2	6	27	180	15	42	-13	14	40	80
3H-224	A20	610	145	166	520	463.6	412.78	463.6	6	27	210	15	42	-13	14	41	80
3H-232	A20	800	150	170	520	463.6	412.78	463.6	6	27	275	24	51	-10	17	42	100

Model		K max.		K Default		L	L1		M	N	P	Q max.	Q min.	R max.	R min.	S	T	U
3H-204	A4	M38x1.5		M32x1.5		3~M10	16.0	15	24	52	14	12.75	6.75	25	22.25	23	10	3~M10
3H-205	A4	M45x1.5		M40x1.5		3~M10	14.5	14.5	31	62	14	20.25	6.75	29.5	26.8	25	10	3~M6
3H-206	A5	M60x2		M55x2		6~M10	16.0	16	37	73	20	21.25	9.25	36	33	31	12	3~M6
3H-208	A6	M75x2		M60x2		6~M12	17.0	15	38	95	25	23.7	10.2	45.7	41.9	35	14	3~M6
3H-210	A8	M95x2		M85x2		6~M16	20.0	22	43	110	30	32.2	12.7	56.5	52.05	40	16	3~M8
3H-212	A11	M115x2		M115x2		6~M20	30.0	28	51	130	30	44.75	14.75	67.8	62.5	50	21	3~M10
3H-215	A8	M155x3	M115x2	M155x3	M100x2	6~M24	36.0	24	63	165	43	49.75	19.75	90	84.7	62	25.5	6~M16
3H-215	A11	M155x3		M155x3		6~M24	36.0	31	63	165	43	49.75	19.75	90	84.7	62	25.5	6~M20
3H-215	A15	M155x3		M155x3		6~M24	36.0	34	63	165	43	49.75	19.75	90	84.7	62	25.5	3~M12
3H-18B	A15	M175x3		M175x3		6~M24	38.0	36	63	165	43	64	20.5	102	96.7	62	25.5	3~M12
3H-221	A15	M190x3		M190x3		6~M24	33.0	36	73	180	60	69.5	24.5	113.5	107.1	65	25	3~M12
3H-224	A20	M225x3		M225x3		6~M24	35.0	33	73	180	60	93.5	24.5	128	121.5	65	25	3~M12
3H-232	A20	M295x3		M295x3		6~M24	36.0	34	73	180	60	150.5	24.5	166	157	65	25	3~M12

The dimensions and the specifications of 3H-2A,3H-BA type are in red data.

The 3H-2 series are power chucks with extra large thru-hole design.
The rotary cylinders are recommended based on power chucks that from 4"~10" are common used in the industry.
If you find that you need different bore size or installation interface, please just contact us. We have many standard and customized rotary cylinders for option and meet your needs.
Please contact AUTOGRIP for more detailed information. Thanks.

3H/3H-A THRU-HOLE POWER CHUCK

- WEDGE-HOOK type 3-jaw with the large through-hole.
- Matching surfaces of all parts hardened, ground and lubricated directly.
- High rigidity and high clamping accuracy.

■ J is the hole diameter of blank draw nut.
If not notified, AUTOGRIP will adopt the K Default as K value.
K is the maximum thread specification and it could be customize.

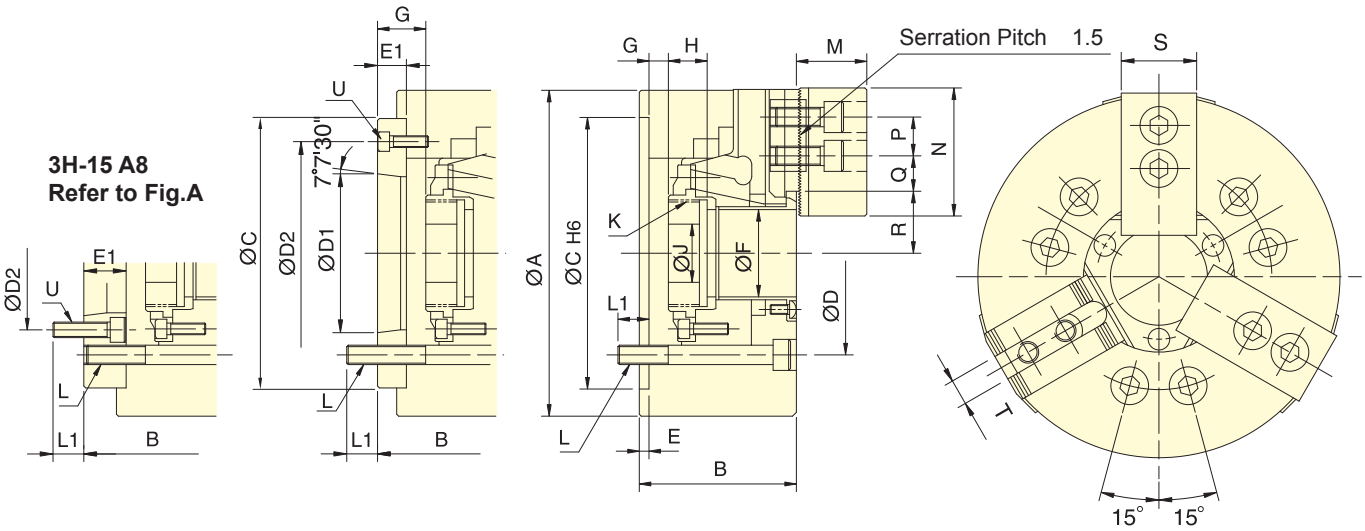

Fig.A 3H-A 3H

Subject to technical changes

SPECIFICATIONS

Model		Plunger stroke	Jaw stroke (Dia.)	Chucking Dia.Max.	Chucking Dia.Min.	Max. D.B. pull	Max. Clamping force	Max. speed	Moment of inertia	Weight		Matching cyl.	Max. pressure
		mm	mm	mm	mm	kN (kgf)	kN (kgf)	min^{-1} (r.p.m.)	kg・m^2	kg			MPa (kgf/cm^2)
3H-12	A8	25	10.6	304	34	54.9 (5600)	143.7(14650)	3300	0.77	56.6	59.3	TK-A1291	2.5(25)
3H-15	A8	25	10.6	381	50	71 (7250)	179.8(18350)	2500	2.28	120	134	TK-A1512	2.3(23)
3H-15	A11	25	10.6	381	50	71 (7250)	179.8(18350)	2500	2.28	120	127	TK-A1512	2.3(23)
3H-18	A11	25	10.6	450	50	71(7250)	180.3(18400)	2000	4.46	160	174	TK-A1512	2.3(23)

DIMENSIONS

Model		A	B		C	D	D1	D2	E	E1	F	G max.		G min.		H	J
3H-12	A8	304	110	122	220	171.4	139.72	190	6	18	91	10	28	-15	3	28	50
3H-15	A8	381	132	159	300	235	139.72	171.4	6	33	120	11	44	-14	19	39	60
3H-15	A11	381	132	148	300	235	196.87	260	6	22	120	11	33	-14	8	39	60
3H-18	A11	450	132	148	300	235	196.87	260	6	22	120	11	33	-14	8	39	60

Model		K max.		K Default		L	L1		M	N	P	Q max.	Q min.	R max.	R min.	S	T	U
3H-12	A8	M100x2		M100x2		6~M16	23	25	51.3	130	30	44.75	14.75	61.3	56	50	21	3~M8
3H-15	A8	M130x2	M115x2	M130x2	M100x2	6~M20	30	24	63	165	43	49.75	19.75	77.5	72.2	62	25.5 or 22	6~M16
3H-15	A11	M130x2		M130x2		6~M20	30	28	63	165	43	49.75	19.75	77.5	72.2	62	25.5 or 22	3~M10
3H-18	A11	M130x2		M130x2		6~M20	31	29	63	165	43	82.75	21.25	77.5	72.2	62	25.5 or 22	3~M10

The dimensions and the specifications of 3H-A type are in red data.

2H/2H-A THRU-HOLE POWER CHUCK

- WEDGE-HOOK type 2-jaw with the large through-hole.
- Matching surfaces of all parts hardened, ground and lubricated directly.
- High rigidity and high clamping accuracy.

■ J is the hole diameter of blank draw nut.
If not notified, AUTOGRIP will adopt the K Default as K value.
K is the maximum thread specification and it could be customize.

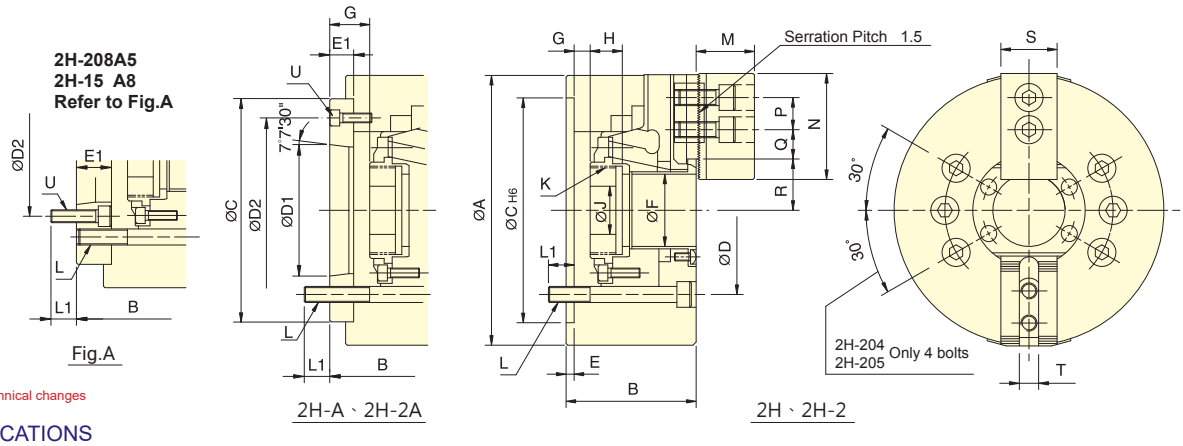

Subject to technical changes

SPECIFICATIONS

Model		Plunger stroke	Jaw stroke (Dia.)	Chucking Dia.Max.	Chucking Dia. Min.	Max. D.B. pull	Max. Clamping force	Max. speed	Moment of inertia	Weight		Matching cyl.	Max. pressure
		mm	mm	mm	mm	kN (kgf)	kN (kgf)	min^{-1} (r.p.m.)	kg • m^2	kg			MPa (kgf/cm^2)
2H-204	A4	13	5.5	113	7	9.2 (940)	19.4 (1980)	8000	0.012	4.2	4.8	TK-A528	1.3 (13)
2H-205	A4	13	5.5	138	10	11.4 (1167)	32 (3260)	7000	0.02	6.8	7.6	TK-A533	1.6 (16)
2H-206	A5	14	6	170	13	15.5 (1580)	44.4 (4530)	6000	0.06	13.1	14.9	TK-A646	1.6 (16)
2H-208	A5	18	7.6	210	17	23.1 (2360)	57.3 (5840)	5000	0.17	21.3	24.2	TK-A853	1.8 (18)
2H-208	A6	18	7.6	210	17	23.1 (2360)	57.3 (5840)	5000	0.17	21.3	22.4	TK-A853	1.8 (18)
2H-210	A8	21	8.9	260	37	32.9 (3355)	101.9 (10385)	4500	0.31	33.5	36.2	TK-A1075	2.2 (22)
2H-12	A8	25	10.6	304	34	36.7 (3740)	95.8 (9780)	3300	0.70	59.7	62.7	TK-A1291	1.7 (17)
2H-15	A8	25	10.6	381	50	46.9 (4790)	119.6 (12200)	2500	2.42	115	129	TK-A1512	1.5 (15)
2H-15	A11	25	10.6	381	50	46.9 (4790)	119.6 (12200)	2500	2.34	115	122	TK-A1512	1.5 (15)

DIMENSIONS

Model		A	B		C	D	D1	D2	E	E1	F	G max.		G min.		H	J
2H-204	A4	113	59	83	85	70.6	63.51	82.6	4	28	32	3.5	31.5	-9.5	18.5	17.5	12
2H-205	A4	138	60	71	110	82.6	63.51	96	4	15	39	1	16	-12	3	20	12
2H-206	A5	170	81	91	140	104.8	82.56	116	5	15	53	13	28	-1	14	17.5	20
2H-208	A5	210	91	109	170	133.4	82.56	104.8	5	23	66	16.5	39.5	-1.5	21.5	20	30
2H-208	A6	210	91	103	170	133.4	106.38	150	5	17	66	16.5	33.5	-1.5	15.5	20	30
2H-210	A8	260	102	115	220	171.4	139.72	190	5	18	86	10.5	28.5	-10.5	7.5	25	45
2H-12	A8	304	110	122	220	171.4	139.72	190	6	18	91	10	28	-15	3	28	50
2H-15	A8	381	133	160	300	235	139.72	171.4	6	33	120	11	44	-14	19	39	60
2H-15	A11	381	133	149	300	235	196.87	260	6	22	120	11	33	-14	8	39	60

Model		K max.		K Default		L	L1		M	N	P	Q max.	Q min.	R max.	R min.	S	T	U
2H-204	A4	M38x1.5		M32x1.5		4~M10	16	15	24	52	14	12.75	6.75	25	22.25	23	10	3~M10
2H-205	A4	M45x1.5		M40x1.5		4~M10	14.5	14.5	31	62	14	20.25	6.75	29.5	26.75	25	10	3~M6
2H-206	A5	M60x2		M55x2		6~M10	16	16	37	73	20	22.75	9.25	36	33	31	12	3~M6
2H-208	A5	M75x2		M60x2		6~M12	17	18	38	95	25	23.7	10.2	45.7	41.9	35	14	6~M10
2H-208	A6	M75x2		M60x2		6~M12	17	15	38	95	25	23.7	10.2	45.7	41.9	35	14	3~M6
2H-210	A8	M95x2		M85x2		6~M16	20	22	43	110	30	32.2	12.7	56.5	52.05	40	16	3~M8
2H-12	A8	M100x2		M100x2		6~M16	23	25	51	130	30	44.75	14.75	61.3	56	50	21	3~M8
2H-15	A8	M130x2	M115x2	M130x2	M100x2	6~M20	30	24	63	165	43	49.75	19.75	77.5	72.2	62	25.5 or 22	6~M16
2H-15	A11	M130x2		M130x2		6~M20	30	28	63	165	43	49.75	19.75	77.5	72.2	62	25.5 or 22	3~M10

The dimensions and the specifications of 2H-A、2H-2A type are in red data.

4H/4H-A THRU-HOLE POWER CHUCK

- WEDGE-HOOK type 4-jaw with the large through-hole.
- Matching surfaces of all parts hardened, ground and lubricated directly.
- High rigidity and high clamping accuracy.

■ J is the hole diameter of blank draw nut.
If not notified, AUTOGRIP will adopt the K Default as K value.
K is the maximum thread specification and it could be customize.

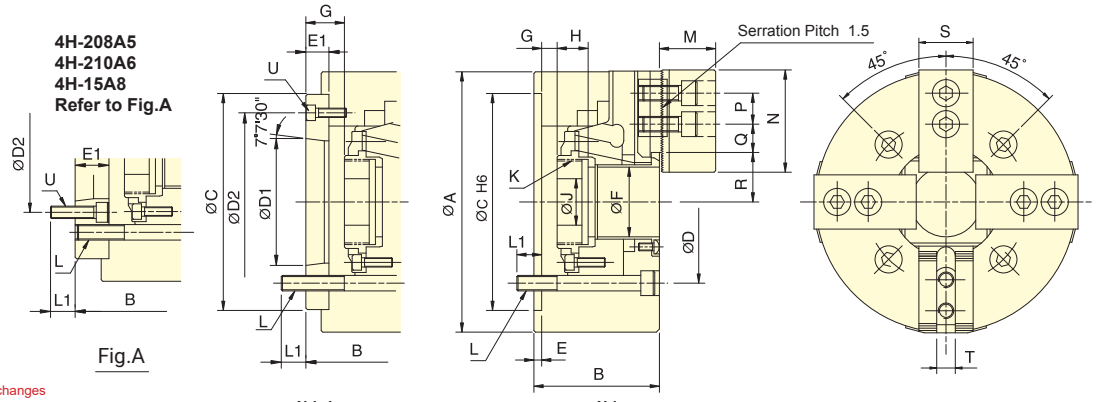

Subject to technical changes

SPECIFICATIONS

Model		Plunger stroke	Jaw stroke (Dia.)	Chucking Dia. Max.	Chucking Dia. Min.	Max. D.B. pull	Max. Clamping force	Max. speed	Moment of inertia	Weight		Matching cyl.	Max. pressure
		mm	mm	mm	mm	kN (kgf)	kN (kgf)	min^{-1} (r.p.m.)	kg • m^2	kg			MPa (kgf/cm^2)
4H-206	A5	14	6.0	170	13	23.2(2375)	66.7(6810)	5000	0.06	12.5	16.7	TK-C646	2.5(25)
4H-208	A5	18	7.6	210	17	34.3(3500)	85.8(8750)	4200	0.19	23.5	25.4	TK-A853	2.8(28)
4H-208	A6	18	7.6	210	17	34.3(3500)	85.8(8750)	4200	0.19	23.5	24.3	TK-A853	2.8(28)
4H-210	A6	21	8.9	260	37	49.1(5010)	152.0(15500)	3800	0.4	38.7	44	TK-A1075	3.2(32)
4H-210	A8	21	8.9	260	37	49.1(5010)	152.0(15500)	3800	0.4	38.7	42.3	TK-A1075	3.2(32)
4H-12	A8	25	10.6	304	34	54.9(5600)	143.6(14650)	2700	0.77	62	65.7	TK-A1291	2.5(25)
4H-15	A8	25	10.6	381	50	71(7250)	179.8(18350)	2000	2.31	117.6	130	TK-A1512	2.3(23)
4H-15	A11	25	10.6	381	50	71(7250)	179.8(18350)	2000	2.31	117.6	123.5	TK-A1512	2.3(23)
4H-18	A11	25	10.6	450	50	71(7250)	179.8(18350)	1700	4.35	162.6	168.5	TK-A1512	2.3(23)

DIMENSIONS

Model		A	B		C	D	D1	D2	E	E1	F	G max.		G min.		H	J
4H-206	A5	170	81	91	140	104.8	82.56	116	5	15	53	13	28	-1	14	17.5	20
4H-208	A5	210	91	109	170	133.4	82.56	104.8	5	23	66	16.5	39.5	-1.5	21.5	20.5	30
4H-208	A6	210	91	103	170	133.4	106.38	150	5	17	66	16.5	33.5	-1.5	15.5	20.5	30
4H-210	A6	260	102	122	220	171.4	106.38	133.4	5	25	86	10.5	35.5	-10.5	14.5	25	45
4H-210	A8	260	102	115	220	171.4	139.72	190	5	18	86	10.5	28.5	-10.5	7.5	25	45
4H-12	A8	304	110	122	220	171.4	139.72	190	6	18	91	10	28	-15	3	28	50
4H-15	A8	381	132	159	300	235	139.72	171.4	6	33	120	11	44	-14	19	39	60
4H-15	A11	381	132	148	300	235	196.87	260	6	22	120	11	33	-14	8	39	60
4H-18	A11	450	132	148	300	235	196.87	260	6	22	120	11	33	-14	8	39	60

Model		K max.		K Default		L	L1		M	N	P	Q max.	Q min.	R max.	R min.	S	T	U
4H-206	A5	M60x2		M55x2		4~M10	16	16	37	73	20	21.25	9.25	36	33	31	12	3~M6
4H-208	A5	M75x2		M60x2		4~M12	17	18	38	95	25	23.7	10.2	45.7	41.9	35	14	6~M10
4H-208	A6	M75x2		M60x2		4~M12	17	15	38	95	25	23.7	10.2	45.7	41.9	35	14	3~M6
4H-210	A6	M95x2		M85x2		4~M16	20	18	43	110	30	32.2	12.7	56.5	52.05	40	16	6~M12
4H-210	A8	M95x2		M85x2		4~M16	20	22	43	110	30	32.2	12.7	56.5	52.05	40	16	3~M8
4H-12	A8	M100x2		M100x2		4~M16	23	25	51.3	130	30	44.75	14.75	61.3	56	50	21	3~M8
4H-15	A8	M130x2	M115x2	M130x2	M100x2	4~M20	30	24	63	165	43	49.75	19.75	77.5	72.2	62	25.5 or 22	6~M16
4H-15	A11	M130x2		M130x2		4~M20	31	28	63	165	43	49.75	19.75	77.5	72.2	62	25.5 or 22	3~M10
4H-18	A11	M130x2		M130x2		4~M20	31	29	63	165	43	82.75	21.25	77.5	72.2	62	25.5 or 22	3~M10

The dimensions and the specifications of 4H-A type are in red data.

3P/3P-A MINI POWER CHUCK

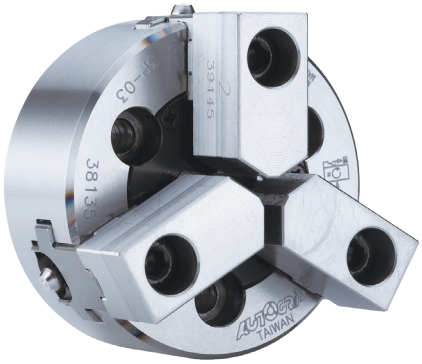

- WEDGE-HOOK type 3-jaw mini power chuck.
- Matching surfaces of all parts hardened, ground and lubricated directly.
- Suitable for bench lathe.

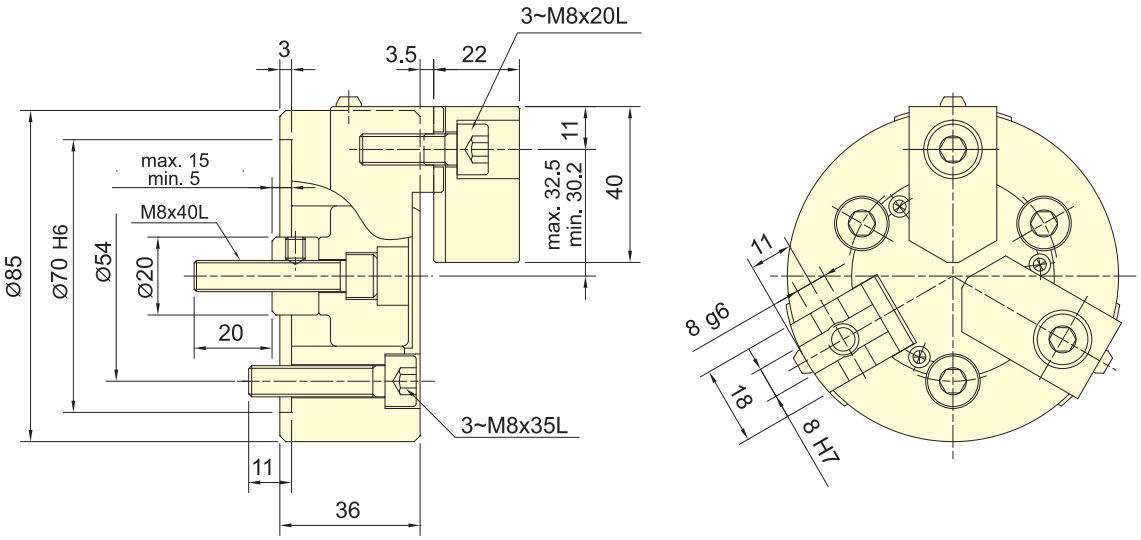

Subject to technical changes

SPECIFICATIONS

Model	Plunger stroke	Jaw stroke (Dia.)	Chucking Dia.Max.	Chucking Dia. Min.	Max. D.B. pull	Max. Clamping force	Max. speed	Moment of inertia	Weight	Matching cyl.	Max. pressure
	mm	mm	mm	mm	kN (kgf)	kN (kgf)	min^{-1} (r.p.m.)	kg • m^2	kg		MPa (kgf/cm^2)
3P-03	10	4.6	85	3	4.5(460)	11.3(1150)	7000	0.004	1.8	RK-75	1.2(12.4)

Standard Soft Jaw For 3P-03 Power Chuck
SJ-K03

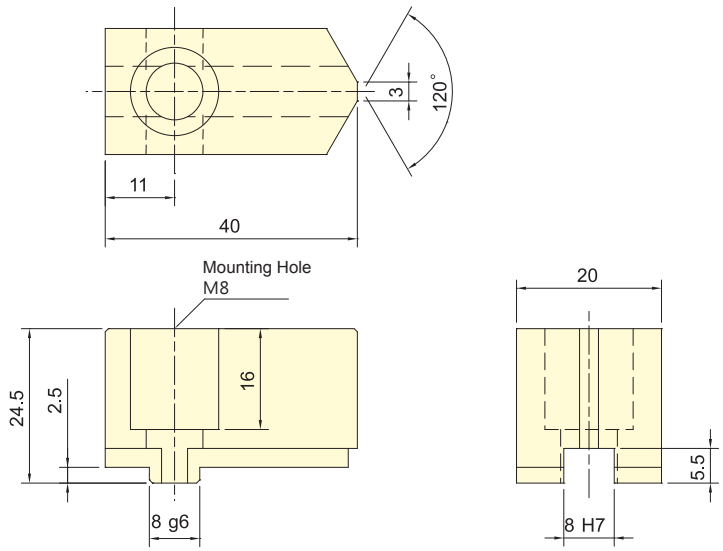

3P/3P-A POWER CHUCK

3-Jaw / Non-Thru-Hole

- WEDGE-HOOK type 3-jaw power chuck.
- Matching surfaces of all parts hardened, ground and lubricated directly.
- High rigidity and high clamping accuracy.

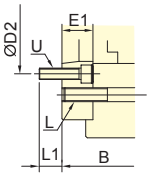

3P-08A5
3P-10A6
3P-12A6
Refer to Fig.A

Fig.A

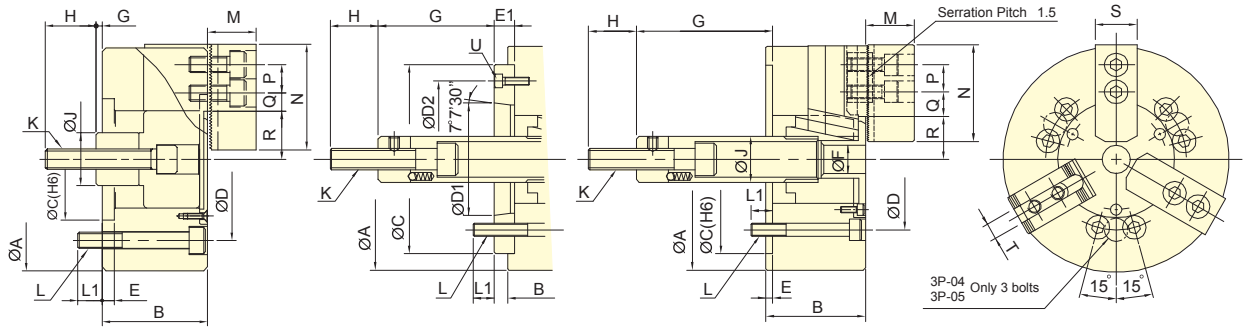

3P-04,3P-05 3P-A 3P

Subject to technical changes

SPECIFICATIONS

Model		Plunger stroke	Jaw stroke (Dia.)	Chucking Dia.Max.	Chucking Dia. Min.	Max. D.B. pull	Max. Clamping force	Max. speed	Moment of inertia	Weight		Matching cyl.	Max. pressure
		mm	mm	mm	mm	kN (kgf)	kN (kgf)	min^{-1} (r.p.m.)	kg・m^2	kg			MPa (kgf/cm^2)
3P-04		15	6.9	110	5	8.1(830)	22.5(2300)	6000	0.01	4.1	-	RK-75(N) RA-130	2.2(22) 0.6(6)
3P-05		15	6.9	135	14	8.1(830)	25(2550)	5500	0.02	6.2	-	RK-75(N) RA-130	2.2(22) 0.6(6)
3P-06	A5	20	9.2	165	16	17.9(1830)	52.4(5350)	5250	0.05	13	14	RK-100(N) RA-170	2.6(26) 0.6(6)
3P-08	A5	21	9.7	210	21	25(2550)	74.5(7600)	4750	0.14	24	28	RK-125(N) RA-220	2.3(23) 0.5(5)
3P-08	A6	21	9.7	210	21	25(2550)	74.5(7600)	4750	0.14	24	27	RK-125(N) RA-220	2.3(23) 0.5(5)
3P-10	A6	25	8.8	254	24	28.9(2950)	107.8(11000)	4000	0.3	35	42	RK-125(N) RA-220	2.6(26) 0.6(6)
3P-10	A8	25	8.8	254	24	28.9(2950)	107.8(11000)	4000	0.3	35	40	RK-125(N) RA-220	2.6(26) 0.6(6)
3P-12	A6	30	10.5	304	24	41(4180)	155.8(15900)	3360	0.73	59	65	RK-150(N) RA-270	2.6(26) 0.8(8)
3P-12	A8	30	10.5	304	24	41(4180)	155.8(15900)	3360	0.73	59	63	RK-150(N) RA-270	2.6(26) 0.8(8)

DIMENSIONS

Model		A	B		C	D	D1	D2	E	E1	F	G max.		G min.		H	J
3P-04		110	52	-	60	80	-	-	6	-	-	18	-	3	-	25	26
3P-05		135	55	-	80	100	-	-	7	-	-	9	-	-6	-	35	28
3P-06	A5	165	74	84	140	104.8	82.56	116	5	15	21	102.6	87.6	82.6	67.6	35	34
3P-08	A5	210	85	103	170	133.4	82.56	104.8	5	23	25	127	104	106	83	36	38
3P-08	A6	210	85	97	170	133.4	106.38	150	5	17	25	127	110	106	89	36	38
3P-10	A6	254	89	109	220	171.4	106.38	133.4	5	25	34	158	133	133	108	36	45
3P-10	A8	254	89	102	220	171.4	139.72	190	5	18	34	158	140	133	115	36	45
3P-12	A6	304	106	125	220	171.4	106.38	133.4	6	25	34	163	138	133	108	36	50
3P-12	A8	304	106	118	220	171.4	139.72	190	6	18	34	163	145	133	115	36	50

Model		K	L	L1		M	N	P	Q max.	Q min.	R max.	R min.	S	T	U
3P-04		M10x1.5	3~M8	12	-	24	52	14	11.2	6.7	23.6	20.15	23	10	-
3P-05		M12x1.75	3~M8	14	-	31	62	14	15.7	5.2	30.4	26.95	25	10	-
3P-06	A5	M16x2	6~M10	14	14	37	73	20	18.25	9.25	38.25	33.65	31	12	3~M6
3P-08	A5	M20x2.5	6~M12	20	17	38	95	25	25.25	11.75	46.3	41.45	35	14	6~M10
3P-08	A6	M20x2.5	6~M12	20	18	38	95	25	25.25	11.75	46.3	41.45	35	14	3~M6
3P-10	A6	M20x2.5	6~M16	18	18	43	110	30	35.25	12.75	51.1	46.7	40	16	6~M12
3P-10	A8	M20x2.5	6~M16	18	25	43	110	30	35.25	12.75	51.1	46.7	40	16	3~M8
3P-12	A6	M20x2.5	6~M16	18	18	51	130	30	48.75	12.75	61	55.75	50	18 or 21	6~M12
3P-12	A8	M20x2.5	6~M16	18	25	51	130	30	48.75	12.75	61	55.75	50	18 or 21	3~M8

The dimensions and the specifications of 3P-A type are in red data.

3P/3P-A POWER CHUCK

- WEDGE-HOOK type 3-jaw power chuck.
- Matching surfaces of all parts hardened, ground and lubricated directly.
- High rigidity and high clamping accuracy.

3P-215A8
3P-221A8
3P-221A11
3P-224A11
Refer to Fig.A

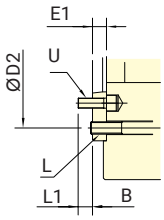

Fig.A

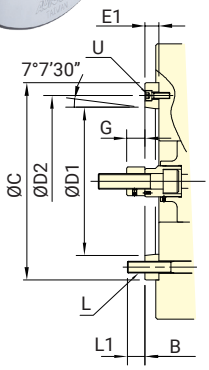

3P-2A

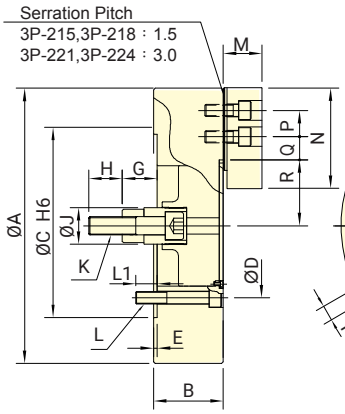

3P-2

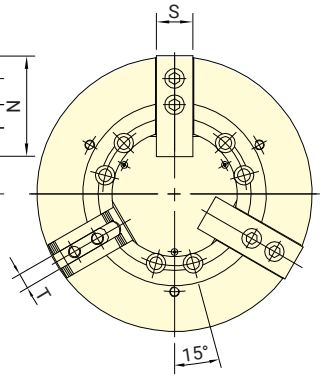

3P-215,3P-218

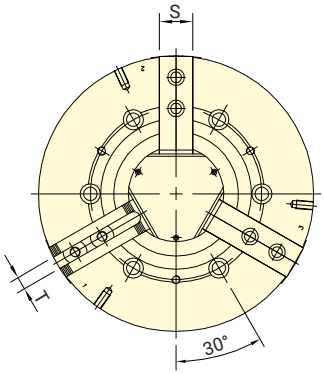

3P-221,3P-224

Subject to technical changes

SPECIFICATIONS

Model		Plunger stroke	Jaw stroke (Dia.)	Chucking Dia. Max.	Chucking Dia. Min.	Max. D.B. pull	Max. Clamping force	Max. speed	Moment of inertia	Weight		Matching cyl.	Max. pressure
		mm	mm	mm	mm	kN (kgf)	kN (kgf)	min^{-1} (r.p.m.)	kg • m^2	kg			MPa (kgf/cm^2)
3P-215	A8	35	16	381	50	82(8360)	249(25390)	3000	1.8	109.9	122.4	RH-200 or RK-200(N)	2.8(28)
3P-215	A11	35	16	381	50	82(8360)	249(25390)	3000	1.8	109.9	116	RH-200 or RK-200(N)	2.8(28)
3P-218	A11	35	16	450	60	82(8360)	249(25400)	2800	2.32	124	130	RH-200 or RK-200(N)	2.8(28)
3P-221	A8	35	16	530	59	82(8360)	272.6(27800)	1900	4.9	177	200	RH-200 or RK-200(N)	2.8(28)
3P-221	A11	35	16	530	59	82(8360)	272.6(27800)	1900	4.9	177	194	RH-200 or RK-200(N)	2.8(28)
3P-224	A11	35	16	610	152	82(8360)	272.6(27800)	1750	7	230	246.28	RH-200 or RK-200(N)	2.8(28)
3P-224	A15	35	16	610	152	82(8360)	272.6(27800)	1750	7	230	238.6	RH-200 or RK-200(N)	2.8(28)

DIMENSIONS

Model		A	B		C	D	D1	D2	E	E1	G max.		G min.		H	J	K
3P-215	A8	381	114	141	300	235	139.72	171.4	6	33	104	71	69	36	55	60	M30x3.5
3P-215	A11	381	114	130	300	235	196.87	260	6	22	104	82	69	47	55	60	M30x3.5
3P-218	A11	450	114	130	300	235	196.87	260	6	22	92	70	57	35	55	60	M30x3.5
3P-221	A8	530	125	152	380	330.2	139.72	171.4	6	33	97	64	62	29	55	60	M30x3.5
3P-221	A11	530	125	146	380	330.2	196.87	235	6	27	97	70	62	35	55	60	M30x3.5
3P-224	A11	610	125	146	380	330.2	196.87	235	6	27	97	70	62	35	55	60	M30x3.5
3P-224	A15	610	125	146	380	330.2	285.78	330.2	6	27	97	70	62	35	55	60	M30x3.5

Model		L	L1		M	N	P	Q max.	Q min.	R max.	R min.	S	T	U
3P-215	A8	6~M20	30	24	63.3	165	43	51.25	18.25	77.5	69.5	62	25.5	6~M16
3P-215	A11	6~M20	30	33	63.3	165	43	51.25	18.25	77.5	69.5	62	25.5	3~M10
3P-218	A11	6~M20	35	33	63.3	165	43	52.75	18.25	108	100	62	25.5	3~M10
3P-221	A8	6~M24	31	24	71	180	60	96.5	24.5	86	78	65	25	6~M16
3P-221	A11	6~M24	31	28	71	180	60	96.5	24.5	86	78	65	25	6~M20
3P-224	A11	6~M24	31	28	71	180	60	96.5	24.5	125	117	65	25	6~M20
3P-224	A15	6~M24	31	34	71	180	60	96.5	24.5	125	117	65	25	3~M12

The dimensions and the specifications of 3P-A type are in red data.

2P/2P-A POWER CHUCK

- WEDGE-HOOK type 2-jaw power chuck.
- Matching surfaces of all parts hardened, ground and lubricated directly.
- High rigidity and high clamping accuracy.

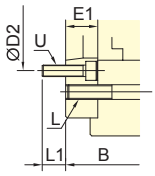

2P-08A5
2P-10A6
Refer to Fig.A

Fig.A

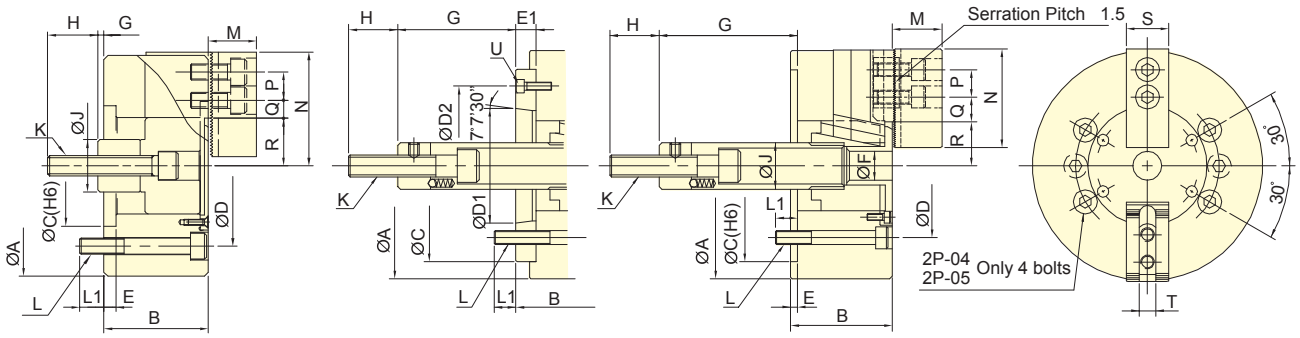

2P-04,2P-05 2P-A 2P

Subject to technical changes

SPECIFICATIONS

Model		Plunger stroke	Jaw stroke (Dia.)	Chucking Dia. Max.	Chucking Dia. Min.	Max. D.B. pull	Max. Clamping force	Max. speed	Moment of inertia	Weight		Matching cyl.	Max. pressure
		mm	mm	mm	mm	kN (kgf)	kN (kgf)	min^{-1} (r.p.m.)	kg • m^2	kg			MPa (kgf/cm^2)
2P-04		15	6.9	110	5	5.3(540)	14.7(1500)	6000	0.01	3.8	-	RK-75(N) RA-130	1.5(15) 0.4(4)
2P-05		15	6.9	135	14	5.3(540)	16.7(1700)	5500	0.02	5.8	-	RK-75(N) RA-130	1.5(15) 0.4(4)
2P-06	A5	20	9.2	165	14	12(1220)	35(3570)	5250	0.04	12	13	RK-100(N) RA-170	1.7(17) 0.4(4)
2P-08	A5	21	9.7	210	17	16.5(1680)	50(5100)	4750	0.13	22	26	RK-125(N) RA-220	1.5(15) 0.4(4)
2P-08	A6	21	9.7	210	17	16.5(1680)	50(5100)	4750	0.13	22	25	RK-125(N) RA-220	1.5(15) 0.4(4)
2P-10	A6	25	8.8	254	22	19.4(1980)	71.5(7300)	4000	0.29	33	42	RK-125(N) RA-220	1.8(18) 0.4(4)
2P-10	A8	25	8.8	254	22	19.4(1980)	71.5(7300)	4000	0.29	33	40	RK-125(N) RA-220	1.8(18) 0.4(4)
2P-12	A8	30	10.5	304	22	27.4(2800)	103.9(10600)	3360	0.70	57	61	RK-150(N)	1.7(17)
2P-15	A11	35	16	381	50	54.9(5600)	164.6(16800)	3000	1.70	96	103	RK-200(N)	1.9(19)

DIMENSIONS

Model		A	B		C	D	D1	D2	E	E1	F	G max.		G min.		H	J
2P-04		110	52	-	60	80	-	-	6	-	-	18	-	3	-	25	26
2P-05		135	55	-	80	100	-	-	7	-	-	9	-	6	-	35	28
2P-06	A5	165	74	84	140	104.8	82.56	116	5	15	21	102.6	87.6	82.6	67.6	35	34
2P-08	A5	210	85	103	170	133.4	82.56	104.8	5	23	25	127	104	106	83	36	38
2P-08	A6	210	85	97	170	133.4	106.38	150	5	17	25	127	110	106	89	36	38
2P-10	A6	254	89	109	220	171.4	106.38	133.4	5	25	34	158	133	133	108	36	45
2P-10	A8	254	89	102	220	171.4	139.72	190	5	18	34	158	140	133	115	36	45
2P-12	A8	304	106	118	220	171.4	139.72	190	6	18	34	163	145	133	115	36	50
2P-15	A11	381	114	130	300	235	196.87	260	6	22	-	104	82	69	47	55	60

Model		K	L	L1		M	N	P	Q max.	Q min.	R max.	R min.	S	T	U
2P-04		M10x1.5	4~M8	12	-	24	52	14	11.3	8.3	23.3	20.15	23	10	-
2P-05		M12x1.75	4~M8	14	-	31	62	14	13.5	6	30.4	26.95	25	10	-
2P-06	A5	M16x2	6~M10	14	14	37	73	20	18.25	9.25	38.25	33.65	31	12	3~M6
2P-08	A5	M20x2.5	6~M12	20	17	38	95	25	22.3	11.8	46.3	41.45	35	14	6~M10
2P-08	A6	M20x2.5	6~M12	20	18	38	95	25	22.3	11.8	46.3	41.45	35	14	3~M6
2P-10	A6	M20x2.5	6~M16	18	18	43	110	30	30.8	11.3	51.1	46.7	40	16	6~M12
2P-10	A8	M20x2.5	6~M16	18	25	43	110	30	30.8	11.3	51.1	46.7	40	16	6~M8
2P-12	A8	M20x2.5	6~M16	18	25	51	130	30	48.5	12.5	-	-	50	18 or 21	6~M8
2P-15	A11	M30x3.5	6~M20	30	33	63	165	43	48.8	23.3	77.5	69.5	62	25.5	3~M10

The dimensions and the specifications of 2P-A type are in red data.

3L/3L-A EXTRA LONG JAW STROKE POWER CHUCK

- CRANK type 3-jaw with the large through-hole and extra long jaw stroke.
- Matching surfaces of all parts hardened, ground and lubricated directly.
- High rigidity and high clamping accuracy.

■ J is the hole diameter of blank draw nut .
K is the maximum thread specification and it could be customize.

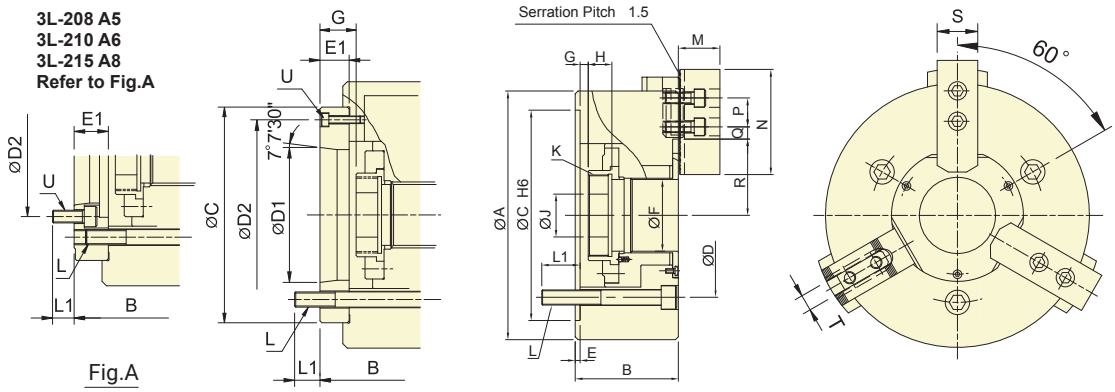

Subject to technical changes

SPECIFICATIONS

Model		Plunger stroke	Jaw stroke (Dia.)	Chucking Dia. Max.	Chucking Dia. Min.	Max. D.B. pull	Max. Clamping force	Max. speed	Moment of inertia	Weight		Matching cyl.	Max. pressure
		mm	mm	mm	mm	kN (kgf)	kN (kgf)	min^{-1}(r.p.m.)	kg • m^2	kg			MPa (kgf/cm^2)
3L-205	A4	12	18	138	6	15.6(1590)	17.2(1750)	4200	0.019	7.2	8	TK-A533	2.3(23)
3L-206	A5	15	24	170	24	23.5(2400)	26.0(2650)	3600	0.063	14.7	15.9	TK-C646	2.7(27)
3L-208	A5	20	32	215	30	34.3(3500)	35.0(3570)	3000	0.18	23	25.7	TK-A853	2.8(28)
3L-208	A6	20	32	215	30	34.3(3500)	35.0(3570)	3000	0.18	23	24.6	TK-A853	2.8(28)
3L-210	A6	25	37.5	260	53	47.7(4870)	48.0(4895)	2400	0.35	39.5	46.5	TK-A1075	3.1(31)
3L-210	A8	25	37.5	260	53	47.7(4870)	48.0(4895)	2400	0.35	39.5	45	TK-A1075	3.1(31)
3L-212	A8	30	45	315	61	64.7(6600)	61.0(6220)	2100	0.827	67.3	70.5	TK-A1291	3.0(30)
3L-215	A8	35	52	405	52	84.3(8600)	85.0(8665)	1600	2.58	139	152	TK-A1512-35	2.7(27)
3L-215	A11	35	52	405	52	84.3(8600)	85.0(8665)	1600	2.58	139	145	TK-A1512-35	2.7(27)

DIMENSIONS

Model		A	B		C	D	D1	D2	E	E1	F	G max.		G min.		H	J
3L-205	A4	138	65	76	110	82.6	63.51	96	4	15	32	1	15	-11	3	20	12
3L-206	A5	170	84	97	140	104.8	82.56	116	5	18	45	6.5	24.5	-8.5	9.5	19	20
3L-208	A5	215	96	114	170	133.4	82.56	104.8	5	23	52	7	30	-13	10	20	30
3L-208	A6	215	96	114	170	133.4	106.38	150	5	23	52	7	30	-13	10	20	30
3L-210	A6	260	108	128	220	171.4	106.38	133.4	5	25	75	8.5	33	-16.5	8	25	45
3L-210	A8	260	108	121	220	171.4	139.72	190	5	18	75	8.5	26.5	-16.5	1.5	25	45
3L-212	A8	315	125	138	220	171.4	139.72	190	5	18	91	15	33	-15	3	30	50
3L-215	A8	405	150	177	300	235	139.72	171.4	6	33	120	12.5	45.5	-22.5	10.5	39	60
3L-215	A11	405	150	166	300	235	196.87	260	6	22	120	12.5	34.5	-22.5	-0.5	39	60

Model		K max.		L	L1		M	N	P	Q max.	Q min.	R max.	R min.	S	T	U
3L-205	A4	M40x1.5		3~M10	15	15	31	62	14	15.75	5.25	38.5	29.5	25	10	3~M6
3L-206	A5	M55x2		3~M10	18	15	37	73	20	15.25	7.75	51	39	31	12	3~M6
3L-208	A5	M60x2		3~M12	18	19	38	95	25	19.25	10.25	63.5	47.5	35	14	6~M10
3L-208	A6	M60x2		3~M12	18	20	38	95	25	19.25	10.25	63.5	47.5	35	14	3~M6
3L-210	A6	M85x2	M60x2	3~M16	24	20	43	110	30	24.75	11.25	80	61.25	40	16	3~M12
3L-210	A8	M85x2		3~M16	24	21	43	110	30	24.75	11.25	80	61.25	40	16	3~M8
3L-212	A8	M100x2		3~M16	24	21	51	130	30	29.75	13.25	96.5	74	50	21	3~M8
3L-215	A8	M130x2		6~M20	33	27.5	63	165	43	34.75	13.75	119	93	62	25.5	6~M16
3L-215	A11	M130x2		6~M20	33	31	63	165	43	34.75	13.75	119	93	62	25.5	3~M10

The dimensions and the specifications of 3L-A type are in red data.

2L/2L-A EXTRA LONG JAW STROKE POWER CHUCK

- CRANK type 2-jaw with the large through-hole and extra long jaw stroke.
- Matching surfaces of all parts hardened, ground and lubricated directly.
- High rigidity and high clamping accuracy.

■ J is the hole diameter of blank draw nut,
K is the maximum thread specification and it could be customize.

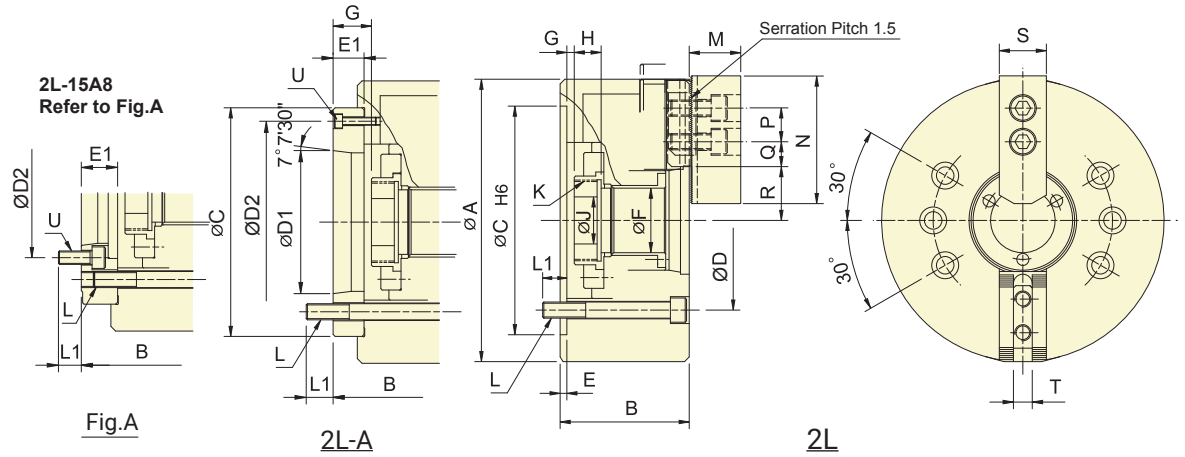

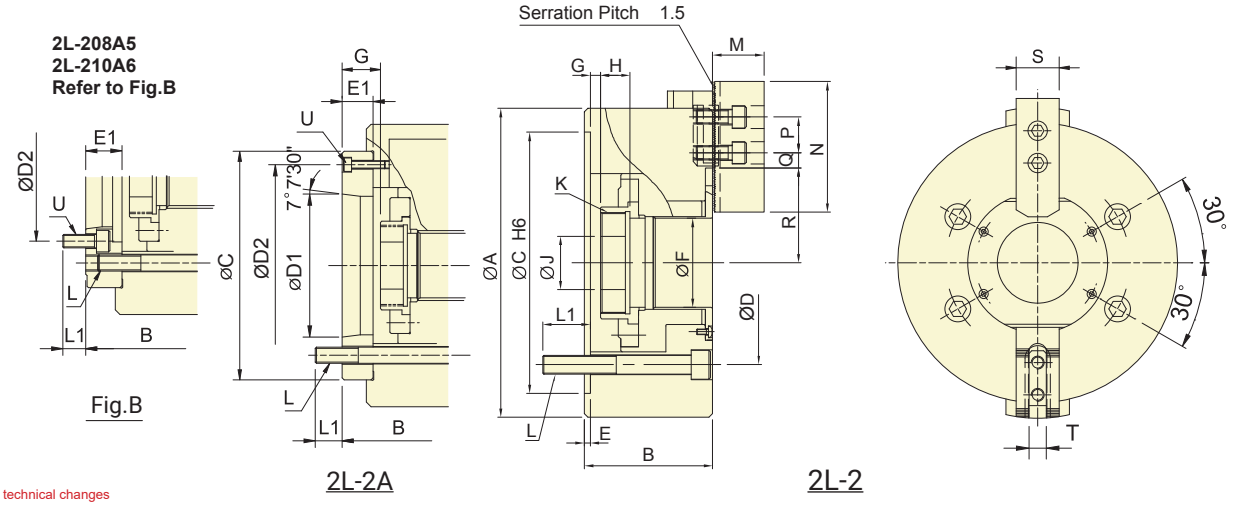

Subject to technical changes

SPECIFICATIONS

Model		Plunger stroke	Jaw stroke (Dia.)	Chucking Dia. Max.	Chucking Dia. Min.	Max. D.B. pull	Max. Clamping force	Max. speed	Moment of inertia	Weight		Matching cyl.	Max. pressure
		mm	mm	mm	mm	kN (kgf)	kN (kgf)	min^{-1} (r.p.m.)	kg • m^2	kg			MPa (kgf/cm^2)
2L-205	A4	12	18	138	6	10.4(1060)	11.4(1170)	4200	0.018	6.9	7.7	TK-A533	1.5(15)
2L-206	A5	15	24	170	24	15.7(1600)	17.3(1760)	3600	0.063	14.4	15.6	TK-C646	1.8(18)
2L-208	A5	20	32	215	30	22.9(2330)	27.1(2760)	3000	0.173	22	26	TK-A853	1.9(19)
2L-208	A6	20	32	215	30	22.9(2330)	27.1(2760)	3000	0.173	22	24.2	TK-A853	1.9(19)
2L-210	A6	25	37.5	260	53	31.8(3250)	37.3(3800)	2400	0.33	40	45.5	TK-A1075	2.1(21)
2L-210	A8	25	37.5	260	53	31.8(3250)	37.3(3800)	2400	0.33	40	44	TK-A1075	2.1(21)
2L-12	A8	30	45	304	30	43.1(4400)	50.0(5100)	2100	0.8	60	65.5	TK-A1291	2.0(20)
2L-15	A8	35	52	385	26	56.2(5730)	53.0(5400)	1600	2.52	133	147	TK-A1512-35	1.8(18)
2L-15	A11	35	52	385	26	56.2(5730)	53.0(5400)	1600	2.52	133	140	TK-A1512-35	1.8(18)

The dimensions and the specifications of 2L-A type are in red data.

2L/2L-A EXTRA LONG JAW STROKE POWER CHUCK

DIMENSIONS

Model		A	B		C	D	D1	D2	E	E1	F	G max.		G min.		H	J
2L-205	A4	138	65	76	110	82.6	63.51	96	4	15	32	1	15	-11	3	20	12
2L-206	A5	170	84	97	140	104.8	82.56	116	5	18	45	6.5	24.5	-8.5	9.5	19	20
2L-208	A5	215	96	114	170	133.4	82.56	104.8	5	23	52	7	30	-13	10	20	30
2L-208	A6	215	96	114	170	133.4	106.38	150	5	23	52	7	30	-13	10	20	30
2L-210	A6	260	108	128	220	171.4	106.38	133.4	5	25	75	8.5	33	-16.5	8	25	45
2L-210	A8	260	108	121	220	171.4	139.72	190	5	18	75	8.5	26.5	-16.5	1.5	25	45
2L-12	A8	304	127	140	220	171.4	139.72	190	5	18	91	15	33	-15	3	28	50
2L-15	A8	385	150	177	300	235	139.72	171.4	6	33	120	12.5	45.5	-22.5	10.5	39	60
2L-15	A11	385	150	166	300	235	196.87	260	6	22	120	12.5	34.5	-22.5	-0.5	39	60

Model		K max.		L	L1		M	N	P	Q max.	Q min.	R max.	R min.	S	T	U
2L-205	A4	M40x1.5		4~M10	15	15	31	62	14	15.75	5.25	38.5	29.5	25	10	3~M6
2L-206	A5	M55x2		4~M10	18	15	37	73	20	15.25	7.75	51	39	31	12	3~M6
2L-208	A5	M60x2		4~M12	18	19	38	95	25	19.25	10.25	63.5	47.5	35	14	6~M10
2L-208	A6	M60x2		4~M12	18	20	38	95	25	19.25	10.25	63.5	47.5	35	14	3~M6
2L-210	A6	M85x2	M60x2	4~M16	24	20	43	110	30	24.75	11.25	80	61.25	40	16	6~M12
2L-210	A8	M85x2		4~M16	24	21	43	110	30	24.75	11.25	80	61.25	40	16	3~M8
2L-12	A8	M100x2		6~M16	22	19	51	130	30	46.25	19.25	77	54.5	50	21	3~M8
2L-15	A8	M130x2		6~M20	33	27.5	63	165	43	51.25	27.25	94.25	68.25	62	25.5	6~M16
2L-15	A11	M130x2		6~M20	33	31	63	165	43	51.25	27.25	94.25	68.25	62	25.5	3~M10

EXTRA LONG JAW STROKE POWER CHUCK

Single-Jaw / Non-Thru-Hole

- CRANK type single-jaw with the large through-hole and extra long jaw stroke.
- Suitable for clamping the jig or irregular work piece.
- High rigidity and high clamping accuracy.

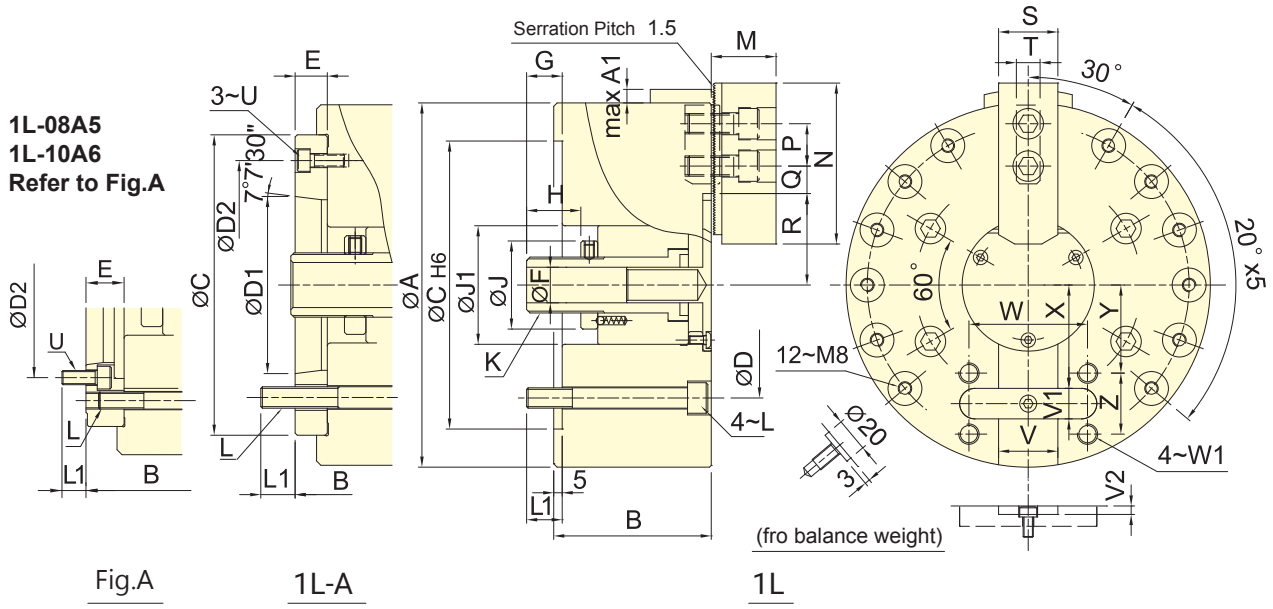

Subject to technical changes

SPECIFICATIONS

Model		Plunger stroke	Jaw stroke	Chucking Dia. Max.	Chucking Dia. Min.	Max. D.B. pull	Max. Clamping force	Max. speed	Moment of inertia	Weight		Matching cyl.	Max. pressure
		mm	mm	mm	mm	kN (kgf)	kN (kgf)	min^{-1} (r.p.m.)	kg • m^2	kg			MPa (kgf/cm^2)
1L-06	A5	20	16	168	5	12.3(1250)	27.3(2780)	3800	0.05	12.5	14.3	RK-100	1.7(17.5)
1L-08	A5	25	20	215	7	15.7(1600)	37.2(3800)	3000	0.15	24.2	27.1	RK-125	1.4(14.3)
1L-08	A6	25	20	215	7	15.7(1600)	37.2(3800)	3000	0.15	24.2	25.3	RK-125	1.4(14.3)
1L-10	A6	30	24	254	17	21.6(2200)	48.5(4950)	2400	0.28	38.8	46	RK-150	1.3(13.7)
1L-10	A8	30	24	254	17	21.6(2200)	48.5(4950)	2400	0.28	38.8	44.3	RK-150	1.3(13.7)

DIMENSIONS

Model		A	A1	B		C	D	D1	D2	E	F	G max.	G min.	H	J	J1	K max.	L	L1	
1L-06	A5	168	9.5	80	90	140	104.8	82.56	116	15	21	37	17	25	46	54	M30x1.5	M10	16	16
1L-08	A5	215	8	93	111	170	133.4	82.56	104.8	23	21	46	21	32	52	70	M33x1.5	M12	21	19
1L-08	A6	215	8	93	105	170	133.4	106.38	150	17	21	46	21	32	52	70	M33x1.5	M12	21	20
1L-10	A6	254	13.5	108	128	220	171.4	106.38	133.4	25	30	47	17	30	62	90	M45x1.5	M16	25	20
1L-10	A8	254	13.5	108	121	220	171.4	139.72	190	18	30	47	17	30	62	90	M45x1.5	M16	25	27

Model		M	N	P	Q max.	Q min.	R max.	R min.	S	T	U	V(H6)	V1(h9)	V2	W	W1	X	Y	Z
1L-06	A5	37	73	20	19.75	7.75	46	30	31	12	M6	30	15	4.5	64	M10	44.5	36	30
1L-08	A5	38	95	25	25.25	10.25	54	34	35	14	M10	35	18	4.5	70	M12	61	52	36
1L-08	A6	38	95	25	25.25	10.25	54	34	35	14	M6	35	18	4.5	70	M12	61	52	36
1L-10	A6	43	110	30	33.75	11.25	67	43	40	16	M8	40	20	5	90	M14	71	58.5	45
1L-10	A8	43	110	30	33.75	11.25	67	43	40	16	M8	40	20	5	90	M14	71	58.5	45

The dimensions and the specifications of 1L-A type are in red data.

LONG JAW STROKE POWER CHUCK

- WEDGE-HOOK type 3-jaw power chuck and long jaw stroke.
- Matching surfaces of all parts hardened, ground and lubricated directly.
- High rigidity and high clamping accuracy.

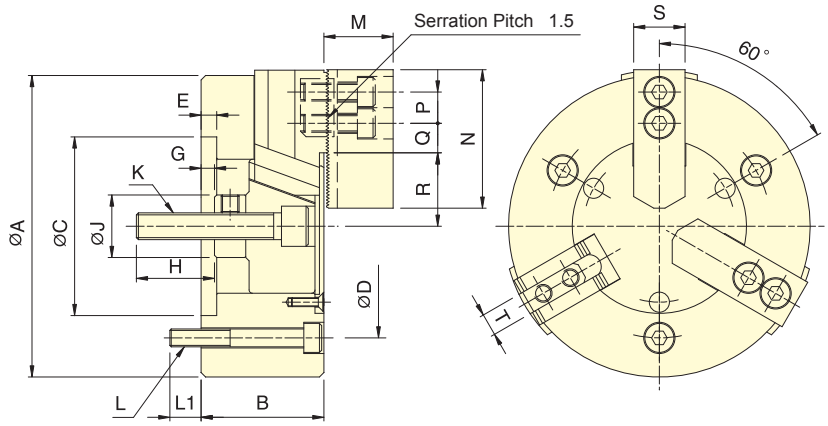

3M-05

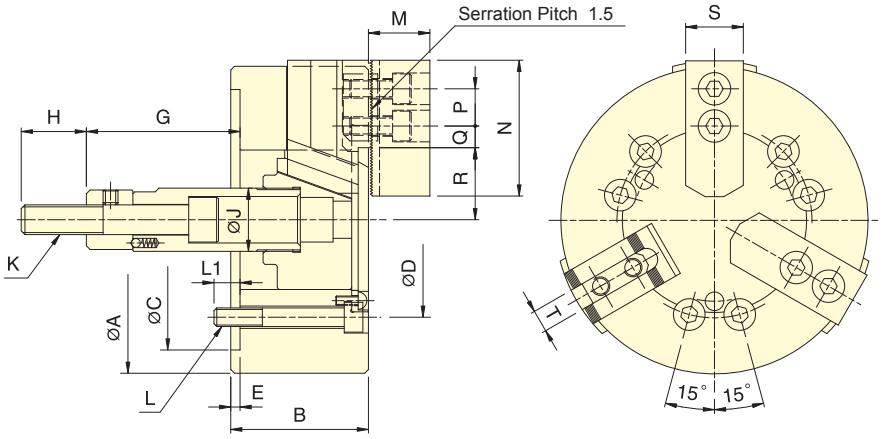

3M-06~3M-12

Subject to technical changes

SPECIFICATIONS

Model	Plunger stroke	Jaw stroke (Dia.)	Chucking Dia. Max.	Chucking Dia. Min.	Max. D.B. pull	Max. Clamping force	Max. speed	Moment of inertia	Weight	Matching cyl.	Max. pressure
	mm	mm	mm	mm	kN (kgf)	kN (kgf)	min^{-1} (r.p.m.)	kg • m^2	kg		MPa (kgf/cm^2)
3M-05	15	10.9	135	14	9.8 (1000)	23 (2350)	4500	0.02	6.0	RK-75(N)	2.7(27)
3M-06	20	14.5	165	14	21.6 (2200)	50 (5100)	4000	0.04	12.2	RK-100(N)	3.0(30)
3M-08	23	16.7	210	17	29.4 (3000)	72 (7340)	3500	0.13	23.0	RK-125(N)	2.9(29)
3M-10	27	19.6	254	22	39.2 (4000)	102 (10400)	3000	0.3	34.3	RK-150(N)	2.8(28)
3M-12	30	21.8	304	26	54.0 (5500)	150 (15300)	2500	0.71	59.4	RK-150(N)	3.6(36)

DIMENSIONS

Model	A	B	C(H6)	D	E	G max.	G min.	H	J	K
3M-05	135	55	80	100	7	6	-9	35	28	M12x1.75
3M-06	165	74	140	104.8	5	101.6	81.6	36	34	M16x2
3M-08	210	85	170	133.4	5	129	106	36	38	M20x2.5
3M-10	254	89	220	171.4	5	160	133	36	45	M20x2.5
3M-12	304	106	220	171.4	6	70	40	46	50	M24x3

Model	L	L1	M	N	P	Q max.	Q min.	R max.	R min.	S	T
3M-05	3~M8	14	31	62	14	15.5	5	32.9	27.45	25	10
3M-06	6~M10	14	37	73	20	17	8	38.7	31.45	31	12
3M-08	6~M12	20	38	95	25	22.3	8.8	47.5	39.15	35	14
3M-10	6~M16	18	43	110	30	32.3	12.8	53.9	44.1	40	16
3M-12	6~M16	18	51	130	30	47.8	13.3	62.5	51.6	50	21

LONG JAW STROKE POWER CHUCK

- WEDGE-HOOK type 3-jaw power chuck and long jaw stroke.
- Matching surfaces of all parts hardened, ground and lubricated directly.
- High rigidity and high clamping accuracy.

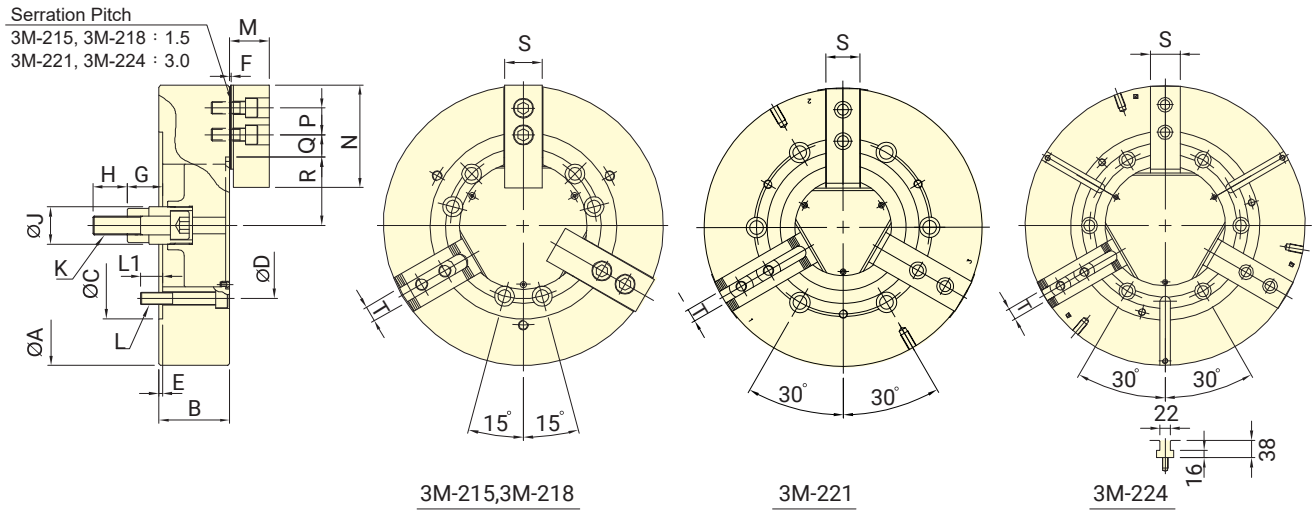

Subject to technical changes

SPECIFICATIONS

Model	Plunger stroke	Jaw stroke (Dia.)	Chucking Dia. Max.	Chucking Dia. Min.	Max. D.B. pull	Max. Clamping force	Max. speed	Moment of inertia	Weight	Matching cyl.	Max. pressure
	mm	mm	mm	mm	kN (kgf)	kN (kgf)	min^{-1} (r.p.m.)	kg • m^2	kg		MPa (kgf/cm^2)
3M-215	35	25.4	381	20	91.0 (9280)	158.9 (16200)	2300	1.8	96	RK-200(N)	3.0(30)
3M-218	35	25.4	450	51	91.0 (9280)	158.9 (16200)	2000	2.32	124	RK-200(N)	3.0(30)
3M-221	35	25.4	530	53	91.0 (9280)	158.9 (16200)	1350	4.9	175	RK-200(N)	3.0(30)
3M-224	35	25.4	610	160	91.0 (9280)	158.9 (16200)	1250	7.2	225	RK-200(N)	3.0(30)

DIMENSIONS

Model	A	B	C(H6)	D	E	F	G max.	G min.	H	J
3M-215	381	114	300	235	6	2	104	69	55	60
3M-218	450	114	300	235	6	2	92	57	55	60
3M-221	530	125	380	330.2	6	3	97	62	55	60
3M-224	610	125	380	330.2	6	3	97	62	55	60

Model	K	L	L1	M	N	P	Q max.	Q min.	R max.	R min.	S	T
3M-215	M30x3.5	6~M20	30	63.3	165	43	49.75	18.25	79	66.3	62	25.5
3M-218	M30x3.5	6~M20	35	63.3	165	43	51.25	18.25	109.5	96.8	62	25.5
3M-221	M30x3.5	6~M24	31	71	180	60	90.5	24.5	92	79.3	65	25
3M-224	M30x3.5	6~M24	31	71	180	60	90	24	131	118.3	65	25

LONG JAW STROKE POWER CHUCK

- WEDGE-HOOK type 2-jaw power chuck and long jaw stroke.
- Matching surfaces of all parts hardened, ground and lubricated directly.
- High rigidity and high clamping accuracy.

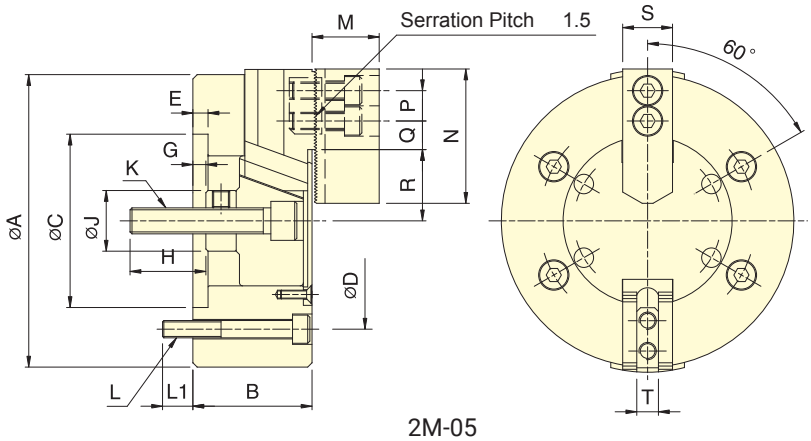

2M-05

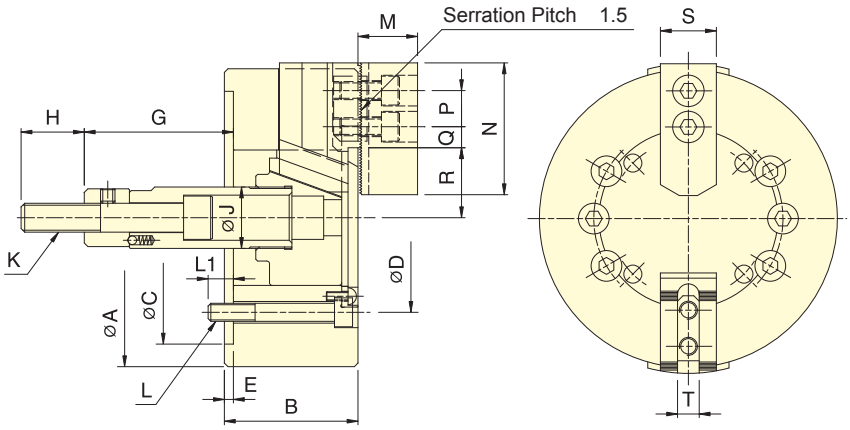

2M-06~2M-12

Subject to technical changes

SPECIFICATIONS

Model	Plunger stroke	Jaw stroke (Dia.)	Chucking Dia. Max.	Chucking Dia. Min.	Max. D.B. pull	Max. Clamping force	Max. speed	Moment of inertia	Weight	Matching cyl.	Max. pressure
	mm	mm	mm	mm	kN (kgf)	kN (kgf)	min^{-1} (r.p.m.)	kg • m^2	kg		MPa (kgf/cm^2)
2M-05	15	10.9	135	14	6.5(660)	11(1120)	4500	0.02	6.0	RK-75(N)	1.8(18)
2M-06	20	14.5	165	14	14.3(1460)	24(2450)	4000	0.04	12.2	RK-100(N)	2.0(20)
2M-08	23	16.7	210	17	19.6(2000)	36.6(3730)	3500	0.13	23.0	RK-125(N)	1.9(19.3)
2M-10	27	19.6	254	22	26.1(2660)	49.3(5030)	3000	0.30	34.3	RK-150(N)	1.8(18.6)
2M-12	30	21.8	304	26	36(3670)	66(6730)	2500	0.71	59.1	RK-150(N)	2.4(24)

DIMENSIONS

Model	A	B	C(H6)	D	E	G max.	G min.	H	J
2M-05	135	55	80	100	7	6	-9	35	28
2M-06	165	74	140	104.8	5	101.6	81.6	36	34
2M-08	210	85	170	133.4	5	129	106	36	38
2M-10	254	89	220	171.4	5	160	133	36	45
2M-12	304	106	220	171.4	6	70	40	46	50

Model	K	L	L1	M	N	P	Q max.	Q min.	R max.	R min.	S	T
2M-05	M12x1.75	4~M8	14	31	62	14	15.5	5	32.9	27.45	25	10
2M-06	M16x2	6~M10	14	37	73	20	17	8	38.7	31.45	31	12
2M-08	M20x2.5	6~M12	20	38	95	25	22.3	8.8	47.5	39.15	35	14
2M-10	M20x2.5	6~M16	18	43	110	30	32.3	12.8	53.9	44.1	40	16
2M-12	M24x3	6~M16	18	51	130	30	47.8	13.3	62.5	51.6	50	21

3V-A POWER CHUCK FOR VERTICAL LATHE

3-Jaw / Non-Thru-Hole

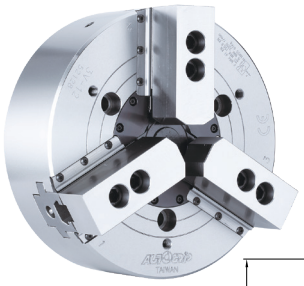

- WEDGE-HOOK type 3-jaw high speed power chuck.
- Sealed against swarf, chips and coolant, suitable for vertical lathe.

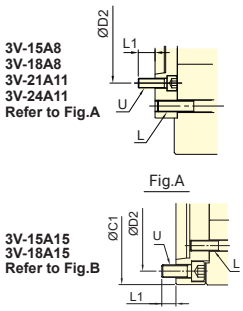

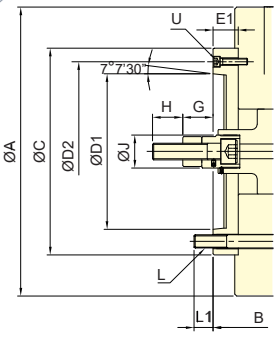

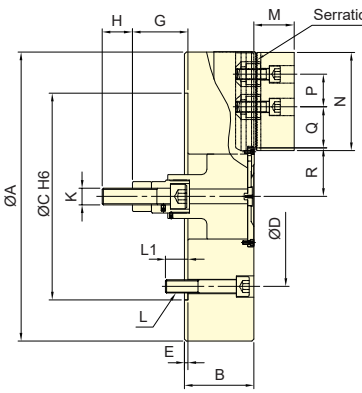

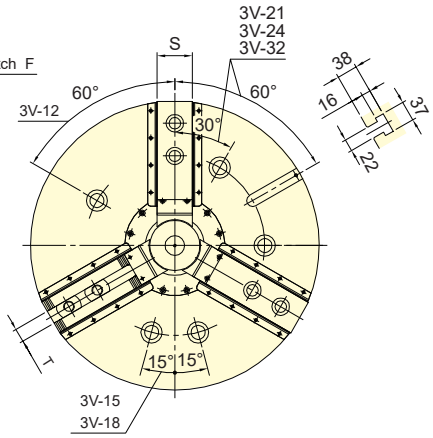

Subject to technical changes

SPECIFICATIONS

Model		Plunger stroke	Jaw stroke (Dia.)	Chucking Dia. Max.	Chucking Dia. Min.	Max. D.B. pull	Max. Clamping force	Max. speed	Moment of inertia		Weight		Matching cyl.	Max. pressure
		mm	mm	mm	mm	kN (kgf)	kN (kgf)	min⁻¹ (r.p.m.)	kg・m²		kg			MPa (kgf/cm²)
3V-12	A8	30	12.7	304	30	41(4180)	156(15900)	3150	0.73	0.79	62.9	68.7	RK-150 RE-150	2.6(26)
3V-15	A8	35	16	381	30	81.9(8360)	245.1(25000)	2900	1.97	2.27	105.5	128.5	RK-200 RE-200K	2.8(28) 3.0(30)
3V-15	A11	35	16	381	30	81.9(8360)	245.1(25000)	2900	1.97	2.27	105.5	127		
3V-15	A15	35	16	381	30	81.9(8360)	245.1(25000)	2900	3.33	2.67	105.5	142		
3V-18	A8	35	16	450	80	81.9(8360)	245.1(25000)	2600	3.33	3.62	132.7	155.5		
3V-18	A11	35	16	450	80	81.9(8360)	245.1(25000)	2600	3.33	3.63	132.7	154.5		
3V-18	A15	35	16	450	80	81.9(8360)	245.1(25000)	2600	6.83	4.02	132.7	165		
3V-21	A11	35	16	530	62	81.9(8360)	271.6(27700)	1800	6.83	7.46	196.5	227		
3V-21	A15	35	16	530	62	81.9(8360)	271.6(27700)	1800	6.83	7.37	196.5	221		
3V-24	A11	35	16	610	136	81.9(8360)	271.6(27700)	1700	11.19	11.83	241.7	272.8		
3V-24	A15	35	16	610	136	81.9(8360)	271.6(27700)	1700	11.19	11.73	241.7	266		
3V-32	A15	35	16	800	136	81.9(8360)	271.6(27700)	1100	28.97	29.51	353.6	378		

DIMENSIONS

Model		A	B		C	C1	D	D1	D2	E	E1	F	G max.		G min.		H	J
3V-12	A8	304	107	141	220	-	171.4	139.72	190	6	40	1.5	113	73	83	43	36	50
3V-15	A8	381	116	164	300	-	235	139.72	171.4	6	54	1.5	153	99	118	64	55	60
3V-15	A11	381	116	168	300	-	235	196.87	260	6	58	1.5	153	95	118	60	55	60
3V-15	A15	381	116	172	-	380	235	285.78	330.2	6	62	1.5	153	91	118	56	55	60
3V-18	A8	450	116	164	300	-	235	139.72	171.4	6	54	1.5	153	99	118	64	55	60
3V-18	A11	450	116	168	300	-	235	196.87	260	6	58	1.5	153	95	118	60	55	60
3V-18	A15	450	116	172	-	380	235	285.78	330.2	6	62	1.5	153	91	118	56	55	60
3V-21	A11	530	127	167	380	-	330.2	196.87	235	6	46	3	137	91	102	56	55	60
3V-21	A15	530	127	167	380	-	330.2	285.78	330.2	6	46	3	137	91	102	56	55	60
3V-24	A11	610	127	167	380	-	330.2	196.87	235	6	46	3	137	91	102	56	55	60
3V-24	A15	610	127	167	380	-	330.2	285.78	330.2	6	46	3	137	91	102	56	55	60
3V-32	A15	800	127	167	380	-	330.2	285.78	330.2	6	46	3	137	91	102	56	55	60

Model		K	L	L1		M	N	P	Q max.	Q min.	R max.	R min.	S	T	U
3V-12	A8	M20x2.5	3~M16	24	24	54	130	30	47.5	16	61	54.65	50	21	3~M8
3V-15	A8	M30x3.5	6~M20	35	24	66	165	43	51.25	18.25	77.5	69.5	62	25.5	6~M16
3V-15	A11	M30x3.5	6~M20	35	32	66	165	43	51.25	18.25	77.5	69.5	62	25.5	3~M10
3V-15	A15	M30x3.5	6~M20	35	26	66	165	43	51.25	18.25	77.5	69.5	62	25.5	6~M24
3V-18	A8	M30x3.5	6~M20	35	24	66	165	43	51.25	18.25	108	100	62	25.5	6~M16
3V-18	A11	M30x3.5	6~M20	35	32	66	165	43	51.25	18.25	108	100	62	25.5	3~M10
3V-18	A15	M30x3.5	6~M20	35	26	66	165	43	51.25	18.25	108	100	62	25.5	6~M24
3V-21	A11	M30x3.5	6~M24	41	35	74	180	60	93.5	24.5	89	81	65	25	6~M20
3V-21	A15	M30x3.5	6~M24	41	35	74	180	60	93.5	24.5	89	81	65	25	3~M12
3V-24	A11	M30x3.5	6~M24	41	35	74	180	60	93.5	24.5	128	120	65	25	6~M20
3V-24	A15	M30x3.5	6~M24	41	35	74	180	60	93.5	24.5	128	120	65	25	3~M12
3V-32	A15	M30x3.5	6~M24	41	35	74	180	60	189.5	24.5	128	120	65	25	3~M12

The dimensions and the specifications of 3V-A type are in red data.

3V-A POWER CHUCK FOR VERTICAL LATHE

- WEDGE-HOOK type 3-jaw high speed power chuck.
- The jaws can be manually adjusted individually to help center the workpiece.
- Sealed against swarf, chips and coolant, suitable for vertical lathe.

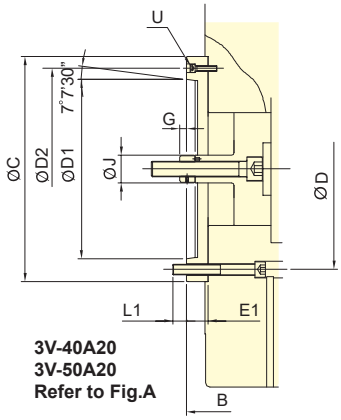

Fig.A

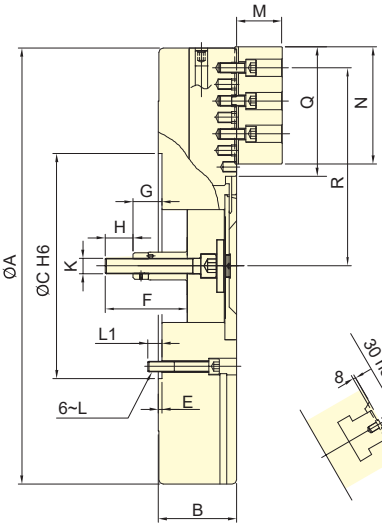

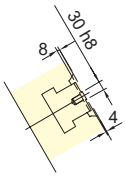

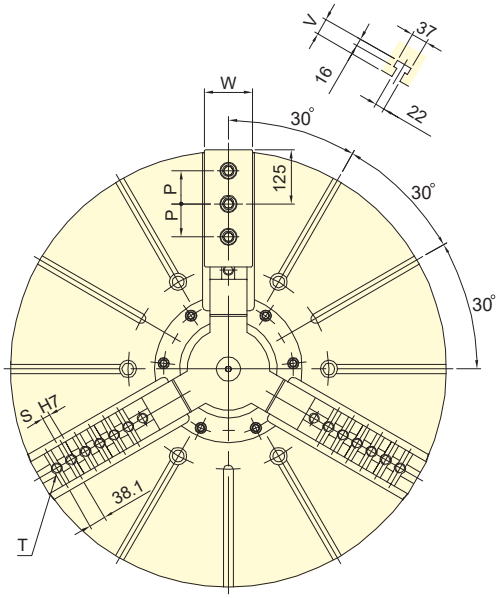

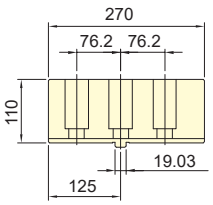

Soft jaw SJ-50 for V-40"~50" SJ-63 for V-63"~79"

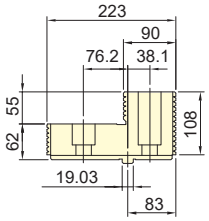

Hardened jaw HJ-50 for V-40"~79"

Subject to technical changes

SPECIFICATIONS

Model		Plunger stroke	Jaw stroke (Dia.)	Chucking Dia.Max.	Chucking Dia.Min.	Max. D.B. pull	Max. Clamping force	Max. speed	Moment of inertia		Weight		Matching cyl.	Max. pressure
		mm	mm	mm	mm	kN (kgf)	kN (kgf)	min^{-1} (r.p.m.)	kg • m^2		kg			MPa (kgf/cm^2)
3V-40	A20	57	46+(60)	1005	310	180(18350)	320(32620)	630	68	72	780	849	RK-250 RE-250 RE-A250 RE-L250	4.2(42)
3V-50	A20	57	46+(60)	1250	290	180(18350)	320(32620)	500	145	148	1000	1050		4.2(42)
3V-63		60	48+(80)	1600	390	200(20390)	360(36700)	400	500	-	1900	-		4.6(46)
3V-79		60	48+(80)	2000	440	200(20390)	360(36700)	320	1250	-	2800	-		4.6(46)

DIMENSIONS

Model		A	B		C	D	D1	D2	E	E1	F	G max.		G min.		H	J	K
3V-40	A20	1005	184	226	520	463.6	412.78	463.6	8	50	190	123	73	66	16	65	65	M36x4
3V-50	A20	1250	184	226	520	463.6	412.78	463.6	8	50	190	123	73	66	16	65	65	M36x4
3V-63		1600	222	-	720	647.6	-	-	8	-	218	131	-	71	-	65	-	M36x4
3V-79		2000	240	-	720	647.6	-	-	8	-	238	133	-	73	-	65	-	M36x4

Model		L	L1	M	N	P	Q	R max.	R min.	S	T	U	V	W
3V-40	A20	M24	37	110	270	76.2	295	457	404	6~19.03	7~M24	3~M12	42	84
3V-50	A20	M24	37	110	270	76.2	416	563	510	9~19.03	9~M24	3~M12	42	84
3V-63		M30	46	110	270	76.2	540	738	674	12~19.03	13~M24	-	42	110
3V-79		M30	48	110	270	76.2	740	914	850	16~19.03	17~M24	-	42	110

The dimensions and the specifications of 3V-A type are in red data.

4V-A POWER CHUCK FOR VERTICAL LATHE

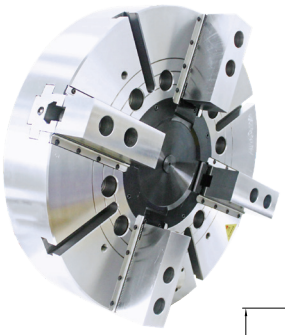

- WEDGE-HOOK type 4-jaw high speed power chuck.
- Sealed against swarf, chips and coolant, suitable for vertical lathe.

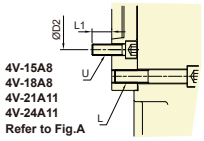

Fig.A

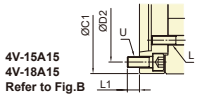

Fig.B

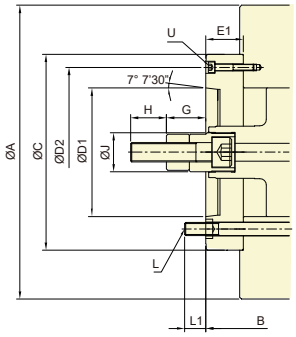

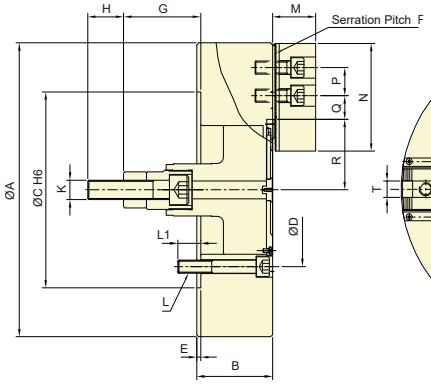

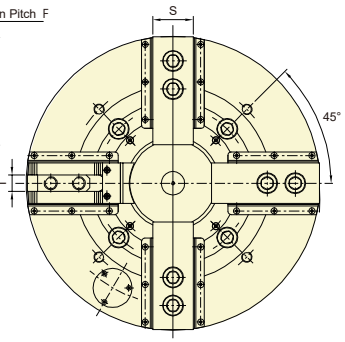

Subject to technical changes

SPECIFICATIONS

Model		Plunger stroke	Jaw stroke (Dia.)	Chucking Dia. Max.	Chucking Dia. Min.	Max. D.B. pull	Max. Clamping force	Max. speed	Moment of inertia		Weight		Matching cyl.	Max. pressure
		mm	mm	mm	mm	kN (kgf)	kN (kgf)	min^{-1} (r.p.m.)	kg・m^2		kg			MPa (kgf/cm^2)
4V-12	A8	30	12.7	304	48	41(4180)	156(15900)	2520	0.72	0.79	59	67	RK-150 RE-150	2.6(26)
4V-15	A8	35	16	381	36	81.9(8360)	245.1(25000)	2300	2.10	2.39	108	131	RK-200 RE-200K	2.8(28) 3.0(30)
4V-15	A11	35	16	381	36	81.9(8360)	245.1(25000)	2300	2.10	2.39	108	130		
4V-15	A15	35	16	381	36	81.9(8360)	245.1(25000)	2300	2.10	2.79	108	139		
4V-18	A8	35	16	450	60	81.9(8360)	245.1(25000)	2050	3.51	3.80	139.3	162		
4V-18	A11	35	16	450	60	81.9(8360)	245.1(25000)	2050	3.51	3.80	139.3	160.9		
4V-18	A15	35	16	450	60	81.9(8360)	245.1(25000)	2050	3.51	4.20	139.3	172		
4V-21	A11	35	16	530	62	81.9(8360)	271.6(27700)	1450	6.98	7.62	199	230		
4V-21	A15	35	16	530	62	81.9(8360)	271.6(27700)	1450	6.98	7.53	199	223.7		
4V-24	A11	35	16	610	152	81.9(8360)	271.6(27700)	1350	11.34	11.98	243.8	275		
4V-24	A15	35	16	610	152	81.9(8360)	271.6(27700)	1350	11.34	11.88	243.8	268.3		
4V-32	A15	35	16	800	152	81.9(8360)	271.6(27700)	880	32.58	33.13	396	419.9		

DIMENSIONS

Model		A	B		C	C1	D	D1	D2	E	E1	F	G max.		G min.		H	J
4V-12	A8	304	107	141	220	-	171.4	139.72	190	6	40	1.5	113	73	83	43	36	50
4V-15	A8	381	116	164	300	-	235	139.72	171.4	6	54	1.5	153	99	118	64	55	60
4V-15	A11	381	116	168	300	-	235	196.87	260	6	58	1.5	153	95	118	60	55	60
4V-15	A15	381	116	172	-	380	235	285.78	330.2	6	62	1.5	153	91	118	56	55	60
4V-18	A8	450	116	164	300	-	235	139.72	171.4	6	54	1.5	153	99	118	64	55	60
4V-18	A11	450	116	168	300	-	235	196.87	260	6	58	1.5	153	95	118	60	55	60
4V-18	A15	450	116	172	-	380	235	285.78	330.2	6	62	1.5	153	91	118	56	55	60
4V-21	A11	530	127	167	380	-	330.2	196.87	235	6	46	3	137	91	102	56	55	60
4V-21	A15	530	127	167	380	-	330.2	285.78	330.2	6	46	3	137	91	102	56	55	60
4V-24	A11	610	127	167	380	-	330.2	196.87	235	6	46	3	137	91	102	56	55	60
4V-24	A15	610	127	167	380	-	330.2	285.78	330.2	6	46	3	137	91	102	56	55	60
4V-32	A15	800	147	187	380	-	330.2	285.78	330.2	6	46	3	137	91	102	56	55	60

Model		K	L	L1		M	N	P	Q max.	Q min.	R max.	R min.	S	T	U
4V-12	A8	M20x2.5	3~M16	24	24	42	110	30	51.75	15.75	61.3	54.9	40	16	4~M8
4V-15	A8	M30x3.5	6~M20	35	24	66	165	43	40.75	18.25	87.5	79.4	62	25.5	6~M16
4V-15	A11	M30x3.5	6~M20	35	32	66	165	43	40.75	18.25	87.5	79.4	62	25.5	4~M10
4V-15	A15	M30x3.5	6~M20	35	26	66	165	43	40.75	18.25	87.5	79.4	62	25.5	6~M24
4V-18	A8	M30x3.5	6~M20	35	24	66	165	43	51.22	18.22	108	100	62	25.5	6~M16
4V-18	A11	M30x3.5	6~M20	35	32	66	165	43	51.22	18.22	108	100	62	25.5	4~M10
4V-18	A15	M30x3.5	6~M20	35	26	66	165	43	51.22	18.22	108	100	62	25.5	6~M24
4V-21	A11	M30x3.5	6~M24	41	35	74	180	60	72.5	24.5	89	81	65	25	6~M20
4V-21	A15	M30x3.5	6~M24	41	35	74	180	60	72.5	24.5	89	81	65	25	3~M12
4V-24	A11	M30x3.5	6~M24	41	35	74	180	60	93.5	24.5	128	120	65	25	6~M20
4V-24	A15	M30x3.5	6~M24	41	35	74	180	60	93.5	24.5	128	120	65	25	3~M12
4V-32	A15	M30x3.5	6~M24	36	35	74	180	60	189.5	24.5	128	120	65	25	3~M12

The dimensions and the specifications of 4V-A type are in red data.

4V-A POWER CHUCK FOR VERTICAL LATHE

- WEDGE-HOOK type 4-jaw high speed power chuck.
- The jaws can be manually adjusted individually to help center the workpiece.
- Sealed against swarf, chips and coolant, suitable for vertical lathe.

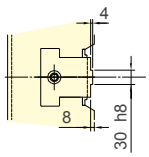

4V-40 A20
4V-50 A20
4V-63 A20
Refer to Fig.A

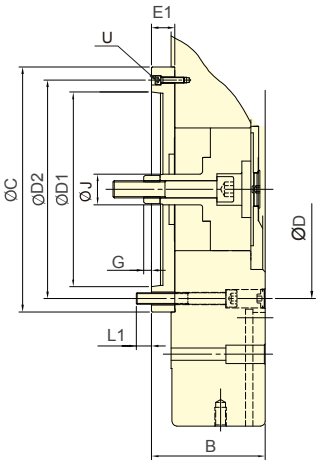

Fig.A

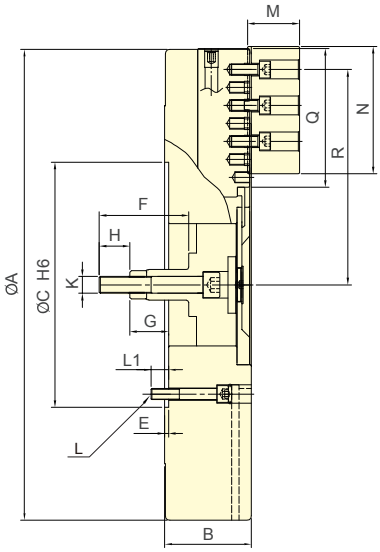

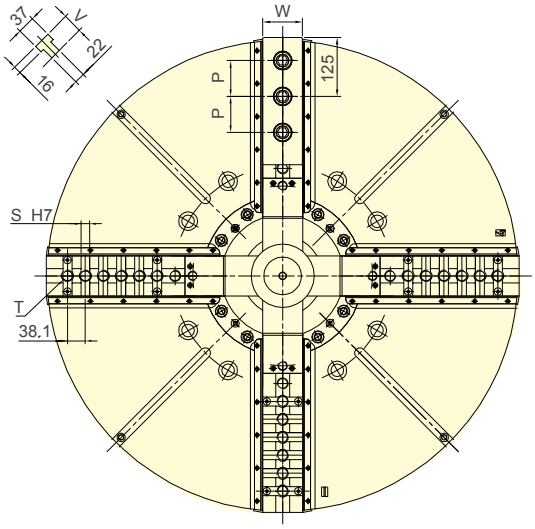

Subject to technical changes

SPECIFICATIONS

Model		Plunger stroke	Jaw stroke (Dia.)	Chucking Dia.Max.	Chucking Dia.Min.	Max. D.B. pull	Max. Clamping force	Max. speed	Moment of inertia		Weight		Matching cyl.	Max. pressure
		mm	mm	mm	mm	kN (kgf)	kN (kgf)	min^{-1} (r.p.m.)	kg • m^2		kg			MPa (kgf/cm^2)
4V-40	A20	57	46+(60)	1000	310	180(18350)	320(32620)	500	70	94	740	790	RK-250 RE-250 RE-A250 RE-L250	4.2(42)
4V-50	A20	57	46+(60)	1250	290	180(18350)	320(32620)	450	222	224	1130	1180		4.2(42)
4V-63		60	48+(80)	1600	390	200(20390)	360(36700)	340	565		2000			4.6(46)

DIMENSIONS

Model		A	B		C	D	D1	D2	E	E1	F	G max.		G min.		H	J	K
4V-40	A20	1000	184	226	520	463.6	412.78	463.6	8	50	190	123	73	66	16	65	65	M36x4
4V-50	A20	1250	200	242	520	463.6	412.78	463.6	8	50	190	123	73	66	16	65	65	M36x4
4V-63		1600	240	-	720	647.6	-	-	8	-	214	131		71		65	-	M36x4

Model		L	L1	M	N	P	Q	R max.	R min.	S	T	U	V	W
4V-40	A20	M24	37	110	270	76.2	295	457	404	6~19.03	7~M24	3~M12	42	84
4V-50	A20	M24	38	110	270	76.2	416	563	510	9~19.03	9~M24	3~M12	42	84
4V-63		M30	46	110	270	76.2	540	738	674	12~19.03	13~M24	-	42	110

The dimensions and the specifications of 4V-A type are in red data.

THRU-HOLE FULLY SEALED TYPE POWER CHUCK

- Fully sealed design extends maintenance intervals, improving production efficiency.
- Sealed design ensures constant lubrication and protects against the ingress of coolant and chips, which guarantees clamping precision and durability.
- Suitable for lights-out manufacturing; dry machining of castings and forgings; or when high-pressure coolant is utilized. Especially ideal for vertical lathes.
- Media fed through central bore - available for coolant or air. (optional)

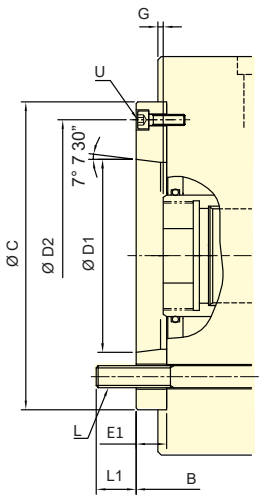

3HS-A

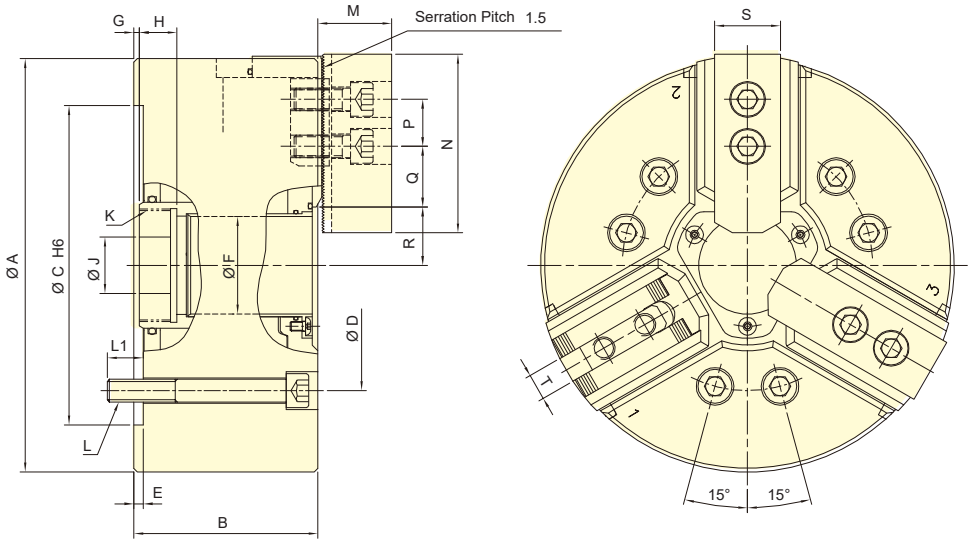

3HS

Subject to technical changes

SPECIFICATIONS

Model		Plunger stroke	Jaw stroke (Dia.)	Chucking Dia. Max.	Chucking Dia. Min.	Max. D.B. pull	Max. Clamping force	Max. speed	Moment of inertia	Weight		Matching cyl.	Max. pressure
		mm	mm	mm	mm	kN (kgf)	kN (kgf)	min^{-1}(r.p.m.)	$kg{\cdot}m^2$	kg			MPa (kgf/cm^2)
3HS-08	A6	18	7.6	220	22	31.9(3250)	92(9380)	5000	0.18	27.4	29	TK-A853	2.6(26)
3HS-10	A8	21	8.9	268	31	50(5100)	132(13460)	4500	0.46	45.4	48.4	TK-A1075	3.2(32)
3HS-12	A11	25	10.6	315	48	58.8(6000)	154(15600)	3500	0.83	65	71.2	TK-A1512	1.9(19)

DIMENSIONS

Model		A	B		C	D	D1	D2	E	E1	F	G max.		G min.		H	J
3HS-08	A6	220	98	110	170	133.4	106.38	150	5	17	52	20	15	2	-3	20	30
3HS-10	A8	268	112	125	220	171.4	139.72	190	5	18	75	24	15	3	-6	25	35
3HS-12	A11	315	118	134	300	235	196.87	260	6	22	91	32.5	14.5	7.5	-10.5	28	50

Model		K max.	K Default	L	L1		M	N	P	Q max.	Q min.	R max.	R min.	S	T	U
3HS-08	A6	M60x2	M55x2	6~M12	19	17	39	95	25	47.75	29.75	29	25.2	35	14	3~M6
3HS-10	A8	M85x2	M70x2	6~M16	24	26	44	110	30	54.25	33.25	41.5	37.05	40	16	3~M8
3HS-12	A11	M100x2	M85x2	6~M20	32	25	52	130	30	65.25	36.75	49.5	44.2	50	21	3~M10

The dimensions and the specifications of 3HS-A type are in red data.

3PS FULLY SEALED TYPE POWER CHUCK

- Fully sealed design extends maintenance intervals, improving production efficiency.
- Sealed design ensures constant lubrication and protects against the ingress of coolant and chips, which guarantees clamping precision and durability.
- Suitable for lights-out manufacturing; dry machining of castings and forgings; or when high-pressure coolant is utilized. Especially ideal for vertical lathes.
- Media fed through central bore - available for coolant or air. (optional)

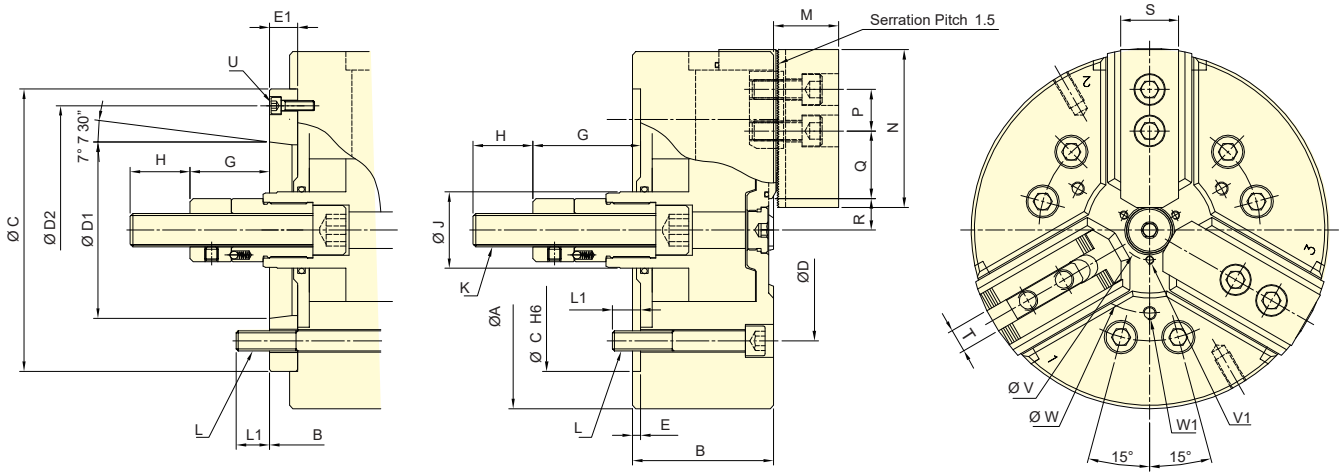

3PS-A 3PS

Subject to technical changes

SPECIFICATIONS

Model		Plunger stroke	Jaw stroke (Dia.)	Chucking Dia.Max.	Chucking Dia.Min.	Max. D.B. pull	Max. clamping force	Max. speed	I	Weight		Matching cyl.	Max. pressure
		mm	mm	mm	mm	kN(kgf)	kN (kgf)	min^{-1}(r.p.m.)	$kg{\cdot}m^2$	kg			MPa (kgf/cm^2)
3PS-08	A6	22	9.3	215	21	30(3060)	82(8360)	4800	0.15	24.7	26.3	RK-125(N)	2.7(27)
3PS-10	A8	24	10.2	260	24	36(3670)	107(10910)	4000	0.32	38.1	40.8	RK-150(N)	3.1(31.7)
3PS-12	A8	30	12.7	315	30	60(6100)	165(16900)	3200	0.75	66.3	69.3	RK-150(N)	3.7(37.9)

DIMENSIONS

Model		A	B		C	D	D1	D2	E	E1	G max.		G min.		H	J	K
3PS-08	A6	215	85	97	170	133.4	106.38	150	5	17	87	70	65	48	36	46	M20x2.5
3PS-10	A8	260	92	105	220	171.4	139.72	190	5	18	86	68	62	44	36	56	M20x2.5
3PS-12	A8	315	106	118	220	171.4	139.72	190	6	18	96	78	66	48	36	67	M20x2.5

Model		L	L1		M	N	P	Q max.	Q min.	R max.	R min.	S	T	U	V	V1	W	W1
3PS-08	A6	6~M12	17	20	39	95	25	54.25	36.25	18.5	13.85	35	14	3~M6	36	3~M5	100	3~M8
3PS-10	A8	6~M16	20	22	44	110	30	69.25	39.25	22.5	17.4	40	16	3~M8	45	3~M6	110	3~M8
3PS-12	A8	6~M16	22	24	52	130	30	86.75	46.25	27	20.65	50	21	3~M8	56	3~M6	220	3~M12

The dimensions and the specifications of 3PS-A type are in red data.