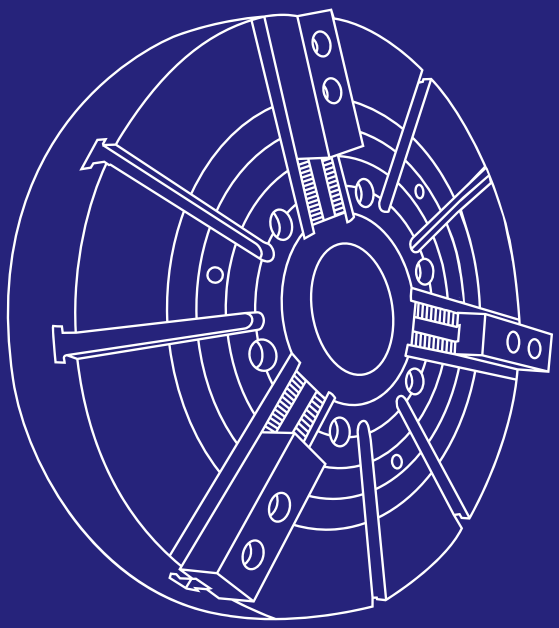

動力夾頭
空油壓迴轉缸
自動化夾持系列

POWER CHUCKS ROTARY CYLINDERS CLAMPING SERIES

佳賀精機股份有限公司 AUTOGRIP MACHINERY COMPANY

佳賀精機 1989 年成立於台灣，以 AUTOGRIP 品牌行銷全球，專注於動力夾頭、空油壓迴轉缸與自動化夾持系列產品的研發與製造，為工件夾持提供最適化的解決方案與服務。

AUTOGRIP machinery was established in 1989 in Taiwan. Our product lines focus on the power chucks, rotary cylinders and automatic clamping series.

We provide the optimized solutions and services for our customers worldwide.

廠區位置 LOCATION OF AUTOGRIP

佳賀精機公司總廠座落於台灣彰化埔心，佔地 4000 坪，配備先進的生產設備，定位為研發中心，專門進行少量多樣的客製化零件製造以及新產品開發。我們秉持世界級標準，致力於滿足客戶需求，確保高水平的客戶滿意度。

二廠則位於雲林科技工業區，為自動化標準品的專業生產線，主要生產 6 吋、8 吋及 10 吋的中空動力夾頭及迴轉油壓缸，專注於大批量生產，旨在滿足市場對快速出貨的需求。

AUTOGRIP Machinery's main factory is located in Puxin, Changhua, Taiwan, covering an area of 13,223 square meters. It is equipped with advanced production equipment and serves as the company's R&D center, focusing on the production of small-volume, customized parts and new product development. We adhere to world-class standards to meet customer needs and ensure high customer satisfaction.

The second factory, located in Yunlin Technology Industrial Park, is an automated production line specializing in standard products. It mainly produces 6", 8", and 10" hollow power chucks and rotary hydraulic cylinders. With a focus on mass production, it meets the market demand for quick delivery.

經營理念 AUTOGRIP'S BUSINESS PHILOSOPHY

秉持誠信與專業精神，致力於提供最專業的產品與服務。

Committed to integrity and professionalism, we strive to provide the most professional products and services.

佳賀精機彰化總廠

我們來自台灣 WE ARE FROM TAIWAN

佳賀精機所有的產品都是在 - 台灣所設計與製造，所以您可以發現我們的產品有很強的台灣精神 – 堅實耐用，擁有高剛性與高精度的高品質。我們的產品在業界擁有好口碑，佳賀致力於提供最適化的工件夾持解決方案與服務。

All the products of AUTOGRIP are designed and made in our hometown-Taiwan. You can find that our products have a strong Taiwan spirit- solid and durable, with high rigidity and high precision.

Our company has a good reputation in the industry. AUTOGRIP is devoted to providing the optimized solutions and service for the workpiece clamping needs.

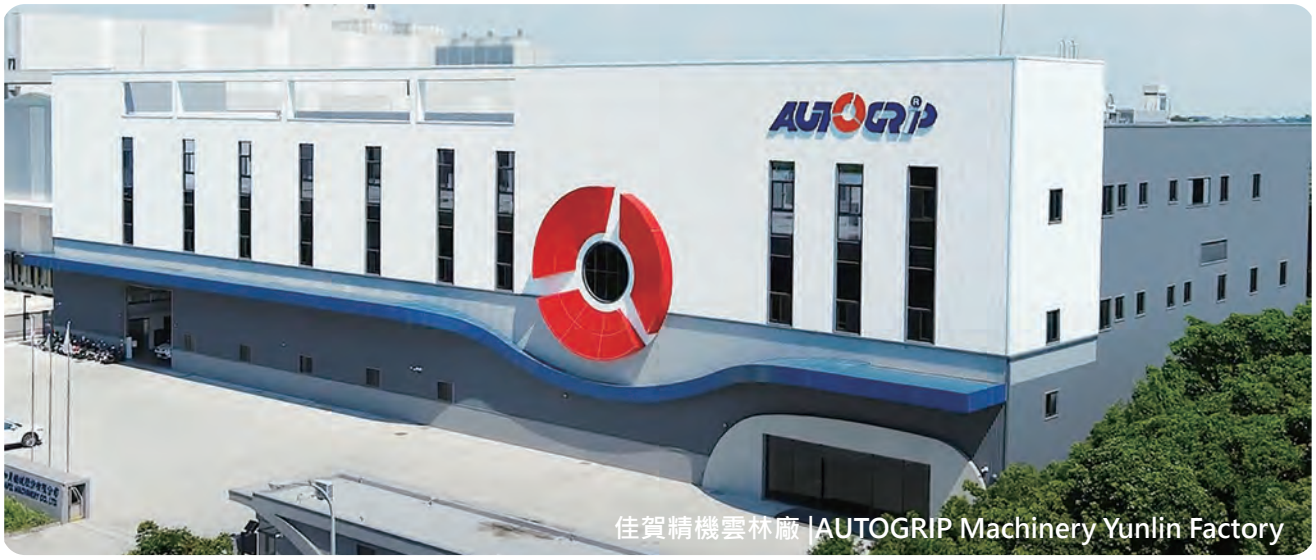

佳賀精機雲林廠 |AUTOGRIP Machinery Yunlin Factory

佳賀機械性能測試實驗室
AUTOGRIP MECHANICAL TESTING LAB.

佳賀機械性能測試實驗室不斷開發可靠的測試設備與技術，為產品品質提供最嚴格的控管。新產品上市前，需經過一連串嚴格的測試，證明產品性能及精度符合設計規範。產品於製造過程中也需接受檢驗，確保產品的優良品質與一致性，替客戶的權益把關，提供客戶最安心的產品使用經驗。

AUTOGRIP mechanical testing lab. continues to develop reliable test equipments and technique for controlling the product quality. Before the new product is launched to the market, the products will go through a series of tests to ensure that the performance and accuracy meet the design specifications. Products in the manufacturing process are also tested regularly to ensure the products are of good quality and consistent.

The Lab controls the quality for the customers and provides customers with the most satisfied experience when using the products.

動態夾持力測試
Dynamic Gripping Force Test

- 利用夾持力感測器，量測額定油壓缸出力下，夾頭夾持力隨主軸轉速的變化。
- The curve of gripping force against rotary speed is obtained via force sensor at a given test condition.

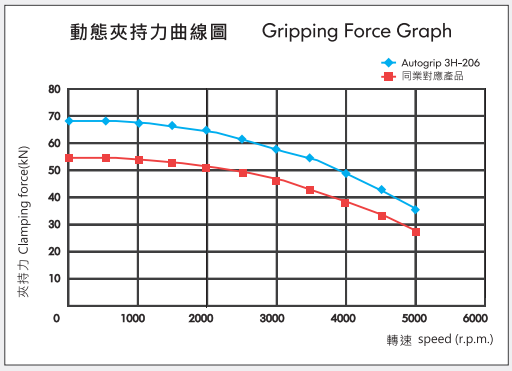

動態洩漏量測試
Dynamic Oil Leaking Test

- 量測油壓缸在不同轉速下的洩漏量，確保其符合規範。
- The oil leaking of cylinder is measured at different rotary speed to ensure it is within engineering specification.

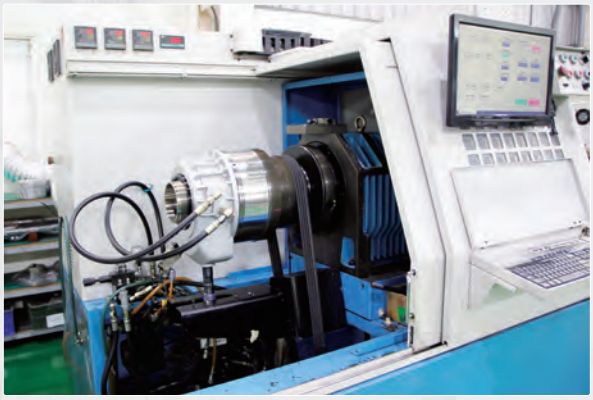

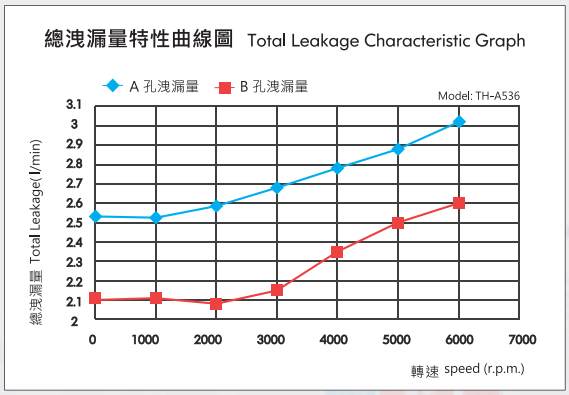

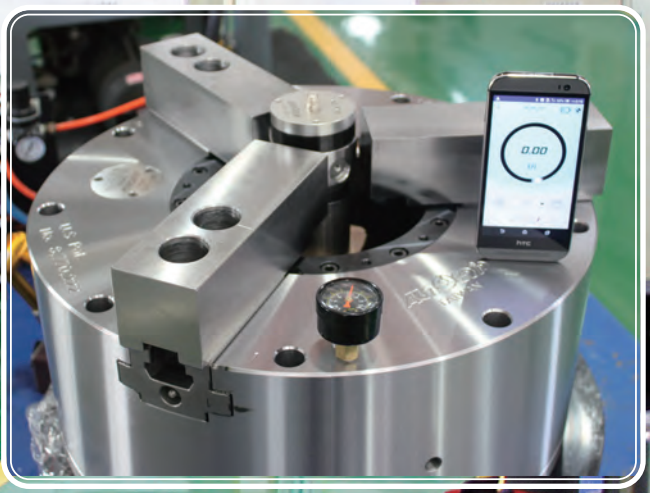

* 本實驗室經 TAF 認證項目：M 999 夾持力測試，包含動態夾持力測試及氣動夾頭夾持力檢測。

*AUTOGRIP Mechanical Testing Lab. is the only one holding ISO/IEC 17025 accreditation - M 999 Gripping Force Test . Include:Dynamic Gripping Force Test and Pneumatic chuck Test.




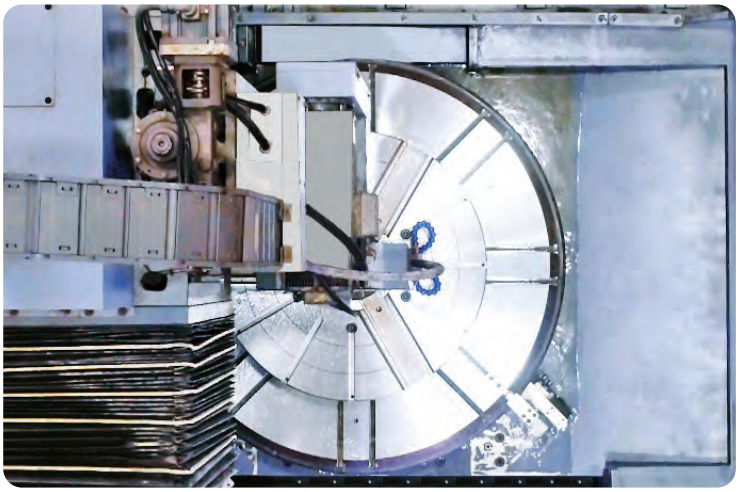

YOUR TRUSTED PARTNER ON **WORKHOLDING**






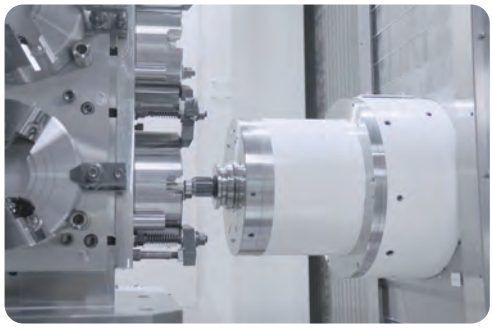




佳賀精機是您工件夾持的最佳夥伴！
Why AUTOGRIP?

1. 我們提供客製化的設計與生產

客製化項目如：自動化夾持及氣密檢知解決方案、特殊空油壓缸、迴轉分流閥及迴轉接頭、特殊夾爪，針對特殊產品需求提供解決方案。

1. Custom design service

Example: Solution of automatic workholding and workpiece seating confirmation, special requirement on air/hydraulic cylinder, rotary valve, rotary joint, or customized soft jaw/hard jaw.

2. 各種動力夾頭和空油壓迴轉缸

動力夾頭：單爪 ~ 六爪，超長爪行程，後拉式，立置式，筒夾夾頭與各式專業的自動化夾持系列。

迴轉缸：提供中空、中實、行程控制、注水 / 注氣、油壓 / 氣壓、單缸 / 雙缸與短型整合型等多樣選擇。

2. Variety of chucks & cylinders

Chuck: 1-jaw to 6-jaw chuck from 3” to 79”, Extra long stroke, Pull back, Stationary chucks, Collet chucks and other clamping solution.

Cylinder: through-hole, Non-through hole, Stroke control, Coolant/air connection, Air cylinder, Double rod, Compact style.

3. 快速的交貨和滿意的服務

AUTOGRIP 自成立以來一直以客戶滿意度為首要目標，我們的專業團隊將竭誠為您提供優質的產品和服務。

3. Faster delivery and satisfied service.

Since its establishment, AUTOGRIP has always prioritized customer satisfaction as our primary goal. Our professional team is dedicated to providing you with high-quality products and services.


GFS-100

夾持力感測器

Gripping force sensor

特色 / FEATURES

- 藍牙 5.0 傳輸穩定。
- Type-C 充電便利。
- 高性能鋰電池。
- 支援 Android 和 iOS。
- 可配置 2 爪或 3 爪操作。

- Stable Bluetooth 5.0 Transmission.
- Convenient Type-C Charging.
- High-Performance Lithium Battery.
- Supports Android and iOS.
- Configurable for 2-Jaw or 3-Jaw Operation.

夾持力感測器規格、寸法，請參閱零附件頁面。GFS-100 specifications and dimensions, Please refer to Accessories pages.

VR 動力定心虎鉗
POWER CENTERING VISE

特色 / FEATURES

- 外型薄、短，有效提升作業空間利用。
- 內建油壓缸，可使用氣壓或油壓作動。
- 側面與底部皆設輸入源介面，可依需求選擇連接。
- 適用於銑床與加工中心機。

- Slim and short profile for improved workspace utilization.
- Built-in hydraulic cylinder operable by either pneumatic or hydraulic pressure.
- Input ports available on both the side and bottom for flexible connection options.
- Suitable for milling machines and machining centers.

型號、規格、寸法，請參閱動力定心虎鉗頁面。Model, specifications, and dimensions, please refer to the Power Centering Vise page.

台灣精品 2020
TAIWAN EXCELLENCE

3W 擺動型後拉三爪夾頭
SWING TYPE THREE-JAW CHUCK

特色 / FEATURES

- 徑向夾持工件後，再施予後拉力量。
- 適合鍛件及鑄件的短錐度面夾持，角度最大 20 度。
- 夾爪具有最大 5 度的旋轉補償機制。
- 具防水及防切屑設計。
- Grip the work piece in radial direction and then pull down.
- Gripping on forging or casting part with taper up to 20°
- Jaw equalizing: 5°Max.
- Anti-dust and Seal proof for cutting fluid,easy to maintain.

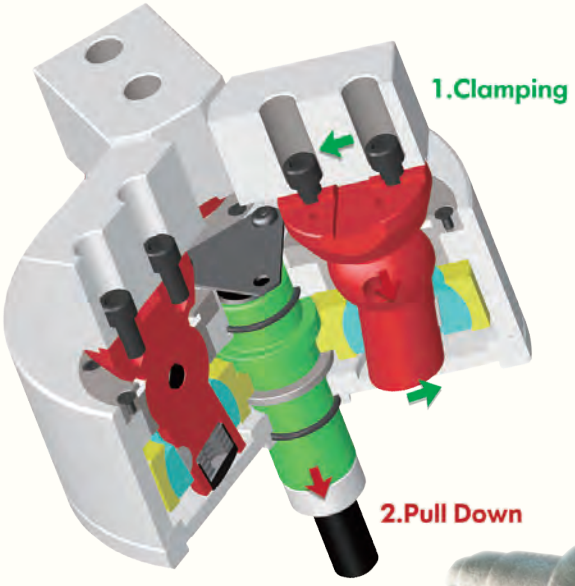

AUTOGRIP

LARGE THRU-HOLE AIR CHUCK

大孔徑中空氣動夾頭

台灣精品 2018
TAIWAN EXCELLENCE

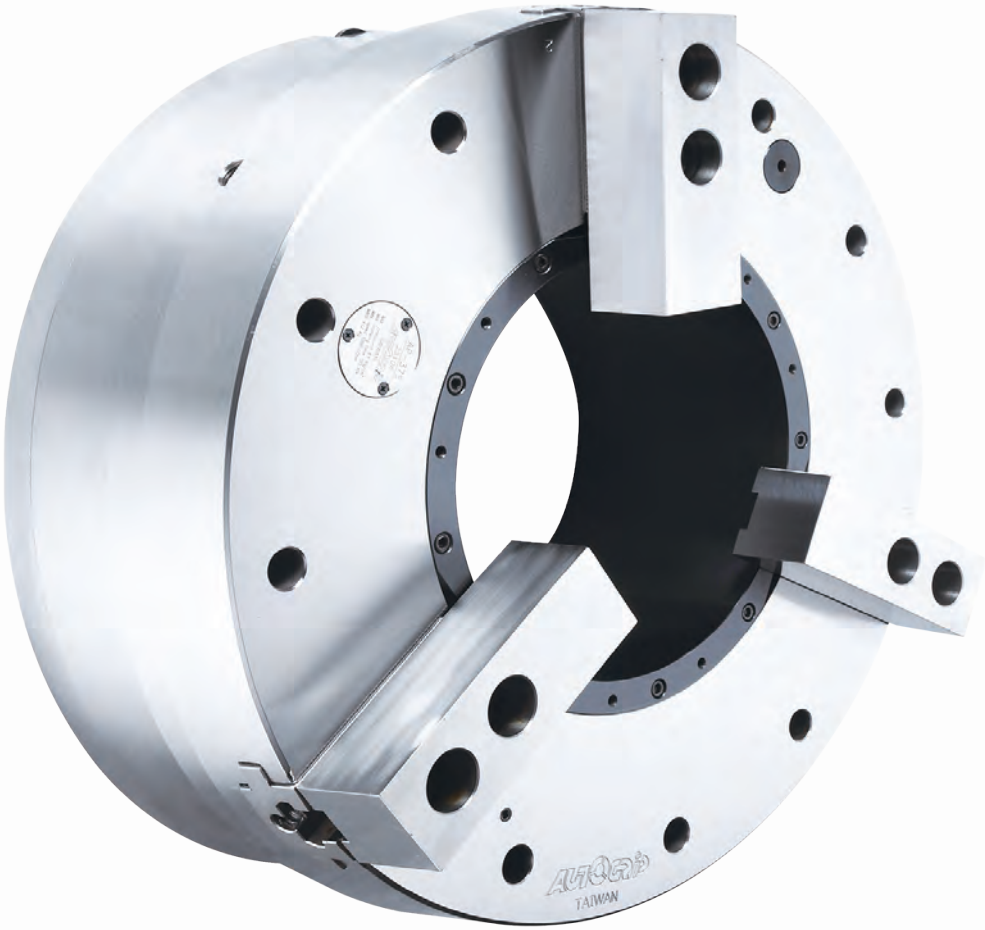

AP 三爪 中空型

特色 / FEATURES

- 超大通孔徑：Ø52mm~Ø375mm。
- 適合大型管材加工。
- 專利注氣系統，內建氣壓缸。
- 無需傳統配氣環，節省安裝及維修成本。
- Large thru-hole : Ø52mm~Ø375mm.
- No distributor ring needed.
- Easy to install.
- Less maintenance.

專利注氣系統

PATENTED AIR FEED SYSTEM

- 外掛式注氣系統，適用於具 C 軸定位車床。
- 壓力檢知機構 : 可檢知內部壓力驟降，確保夾持安全。
- Built-in cylinder / Check valve.
- Pressure detection / Unique design.

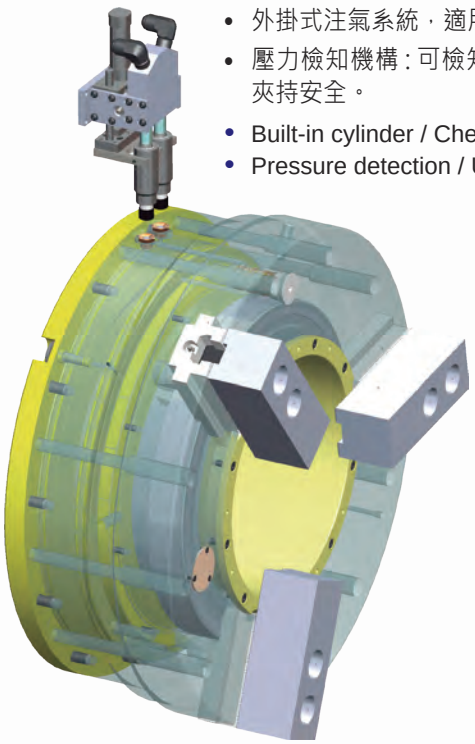

AUTOGRIP

POWER CHUCK FOR VERTICAL LATHE

楔形中實防切屑及防水動力夾頭

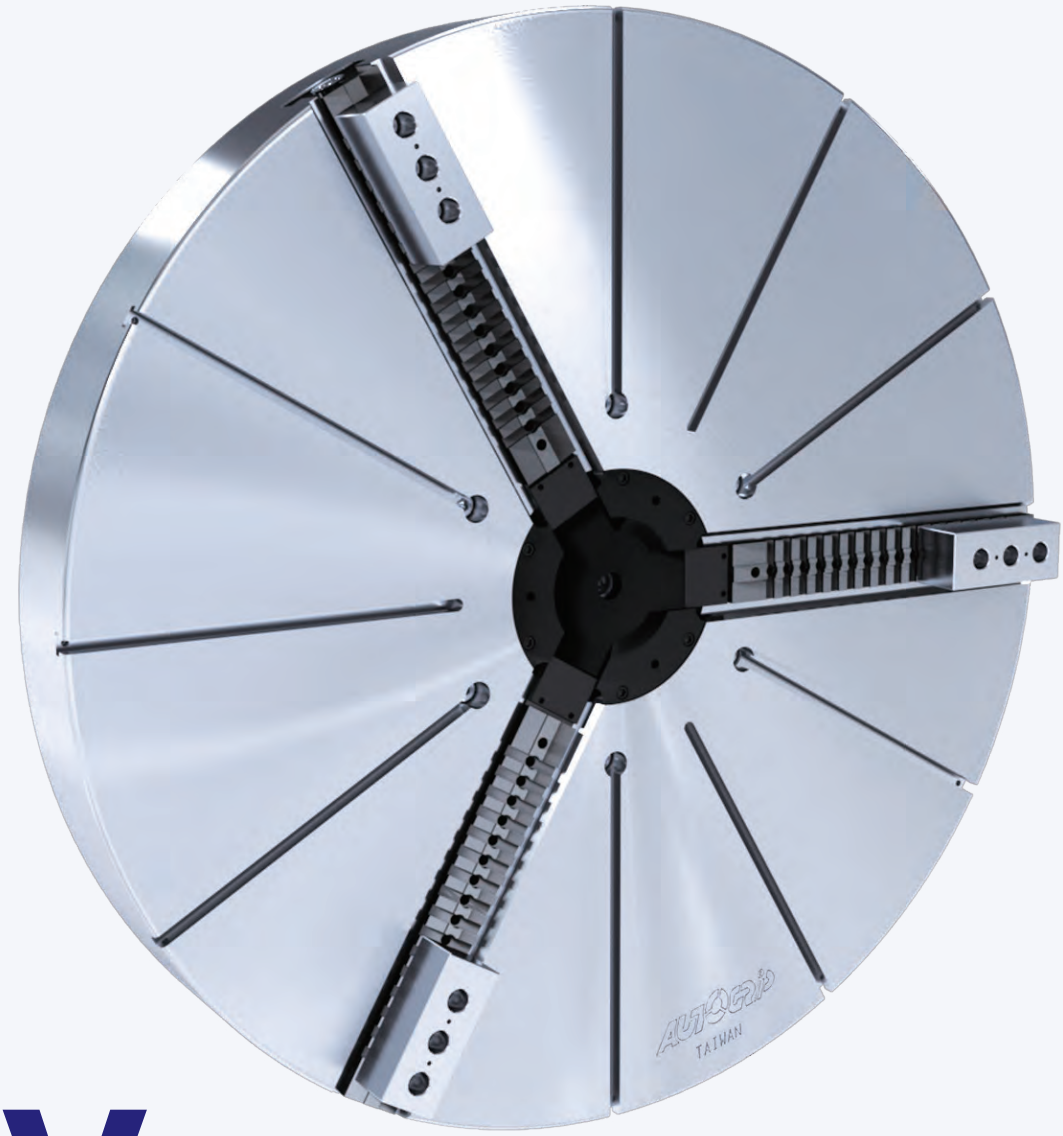

3V SERIES 系列

最大直徑可達 The maximum diameter is

2000mm(79")

特色 / FEATURES

- 楔形三爪中實夾頭。
- 主爪可手動調整行程 , 以利工件求心。
- 防切屑及防水設計，特別適合使用於立式車床。
- It's a WEDGE-HOOK type 3-jaw high speed power chuck.
- With manual radial setting of master jaws for the workpieces centering.
- Sealed against swarf, chips and coolant, suitable for vertical lathe.

- 產品型號 / 尺寸 : 有 3, 4 或 6 爪等型式。
- 直徑 : 12"~79" 種類齊全。
- 適用迴轉油壓缸 : RE 系列。
- Various Models / Size:
  Available in 3 , 4 and 6-jaw versions .
- with sizes 12 to 79 inch diameter.
- Rotary cylinder : RE series .

IS

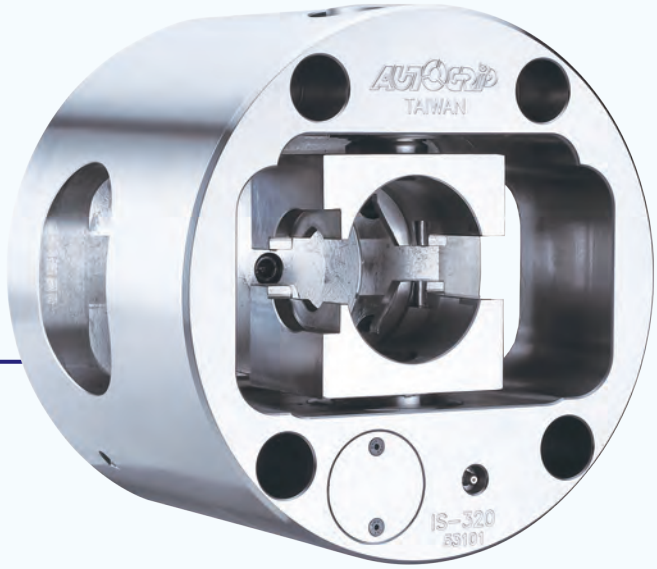

自動分度夾頭

Power Indexing Chuck

特色 / FEATURES

- 主軸運轉過程中進行分度操作，可於多個工作軸之間進行快速轉換。
- 夾頭內部零件均經硬化及精密研磨，並直接潤滑。
- 防水及防切屑設計。
- 高剛性結構及高重複精度。
- 獨特的分度系統及液壓系統，夾頭有壓力檢知機構，可靠性高。

- Indexing operates during the spindle rotation, can perform a quick change between multiple working axles.
- All parts of chuck hardened, ground and lubricated directly.
- Sealed against swarf, chips and coolant.
- High rigidity and high repeatability precision.
- Unique indexing system and hydraulic system, with pressure detection device in chuck, high reliability.

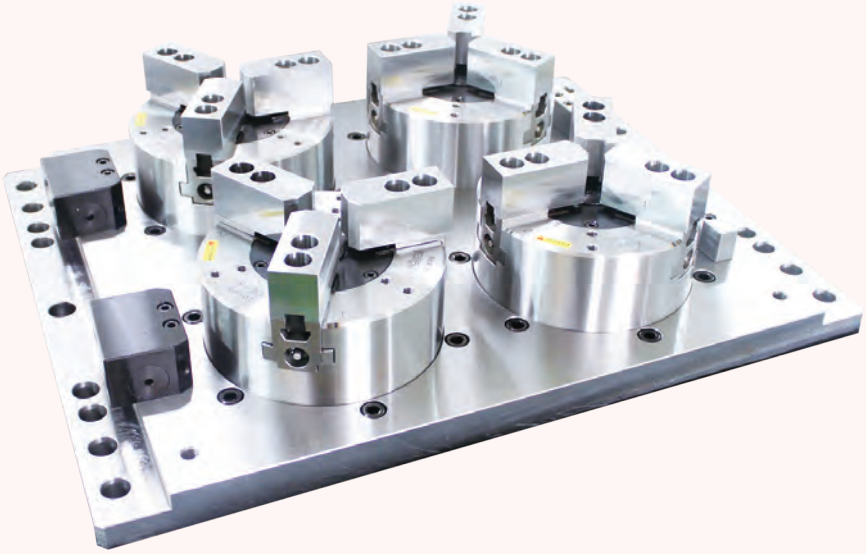

MP4 立置夾頭座板 Multi-plate.4-plate

特色 / FEATURES

- 適用於銑床 / 綜合加工中心機。
- 同時加工四個工件 (可訂製 2,3,6 工件數的盤面)。
- 可搭配 SP/SM/SD/SU/SE 立置夾頭。
- 適用油壓 / 氣壓。
- 每個夾頭為獨立迴路控制。
- 特殊油路設計、可降低夾頭工作面高度。
- 保壓裝置 (選配)。
- 氣密檢知 (選配)。

- For milling machine / machine center.
- Allow simultaneous machining with up to 4 grippers. (Order can be customized for 2,3,6 grippers).
- Work with SP/SM/SD/SU/SE vertical chuck.
- Driven by Hydraulic or Pneumatic.
- Individual circuit for each chuck.
- Special design and reduce the height of working surface.
- Lock valve unit (optional).
- Air tight detection function(optional).

立置式夾頭系列 STATIONARY CHUCK SERIES

SP - 立置式三爪夾頭
SP-type
* 斜楔式。
*Wedge-hook type.

SD - 立置式後拉夾頭
SD-type
* 後拉式 / 重切削 / 氣密檢知。
*Pull down / Heavy duty machining/Air tight detection.

SE - 立置式內張後拉夾頭
SE-type
* 後拉式 / 內徑夾持 / 氣密檢知。
*Pull lock / Inner dia. clamping / Air tight detection.

SM - 立置式長行程夾頭
SM-type
* 超長爪行程 / 氣密檢知。
*Long jaw stroke/Air tight detection.

SU - 立置式爪背托後拉夾頭
SU-type
* 後拉式 / 重切削 / 氣密檢知。
*Pull lock / Heavy duty machining/ Air tight detection.

還在使用傳統的彈性筒夾嗎？
推薦您升級為 橡膠筒夾

車床用型式

CBD


RG

高精度 | 防切屑 | 快速更換爪件

銑床用型式 : 內建油 (氣) 缸
搭配硬爪拆卸工具，爪件更換更便利

SCB

卸爪器


RG

單一規格筒夾之夾持範圍可達 ±0.5mm

AUTOGRIP

ROTARY CYLINDER & LINEAR POSITION SENSOR

超短型中空 / 中實迴轉油壓缸附線性定位系統機構

特色 / FEATURES

- 全行程檢知。
- 更換工件時不需手動調整近接開關。
- 減少停機時間，增加工作效率。
- 全系列空油壓迴轉缸皆可選配。
- Entire stroke range position monitoring.
- Position setup by teach-in function.
- Manual adjustment for proximity switch is unnecessary when changing workpiece.
- Suitable for sub-spindle or vertical lathes with limited space.
- Reduce idle time, increase throughput.

立式車床油壓缸

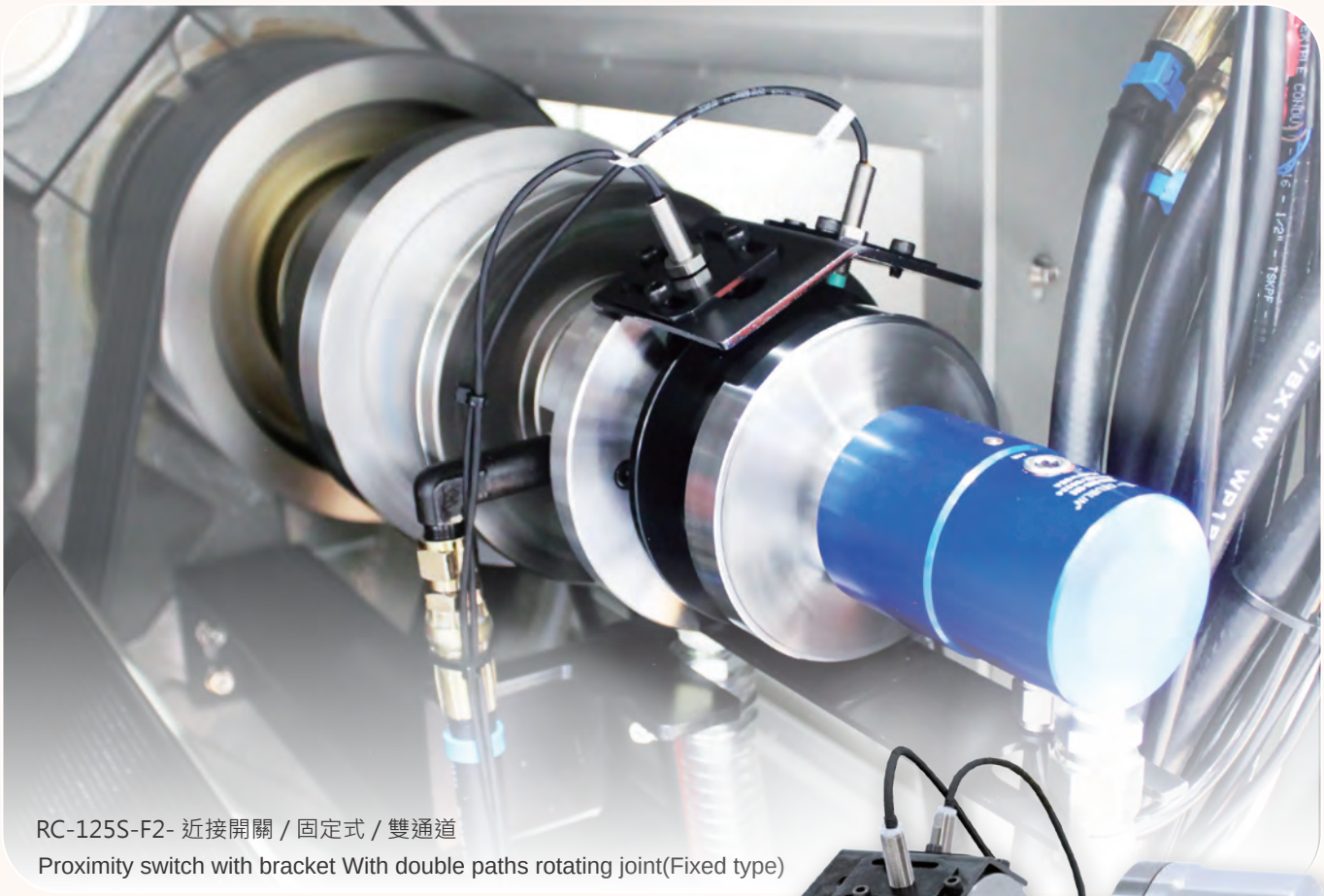

RC-125S-F2- 近接開關 / 固定式 / 雙通道
Proximity switch with bracket With double paths rotating joint(Fixed type)

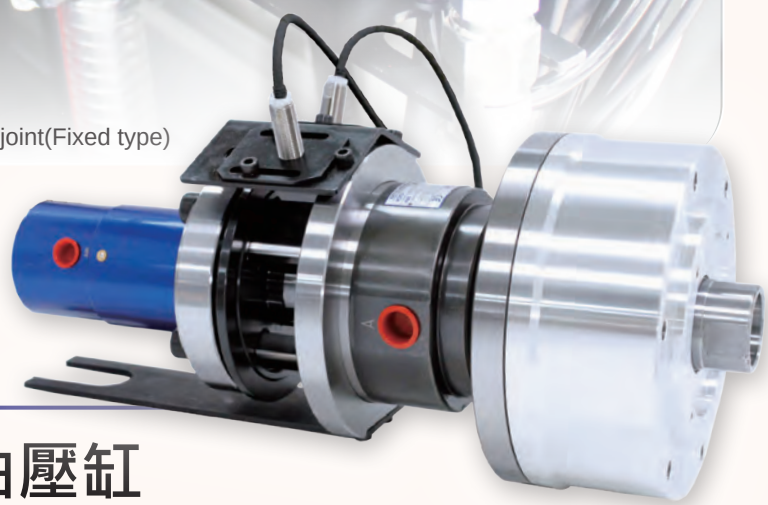

RC series

迴轉接頭外接型迴轉油壓缸
HYDRAULIC CYLINDER WITH ROTATING JOINT

特色 / FEATURES

- 中實型帶通道油壓缸。
- 可外接單通道或雙通道迴轉接頭，同時滿足氣密檢測及中心出水的需求。
- 內建逆止閥自鎖機構。
- 可選擇所合適的近接開關或線性位移感測器進行行程控制。
- 近接開關及外接單通道或雙通道迴轉接頭為選購品。

- Medium and solid hydraulic cylinder with channel.
- Can choose an external rotary joint with either single or double paths.
- It meets the demand for coolant through spindle and airtight pressure detect function.
- Has a buil-in check valve for safety.
- The proximity switch and single or double paths rotating joint are optional.
- Stroke control via proximity switch or linear positioning system.

夾頭選定建議表
CHUCK CHOOES PROPOSE LIST

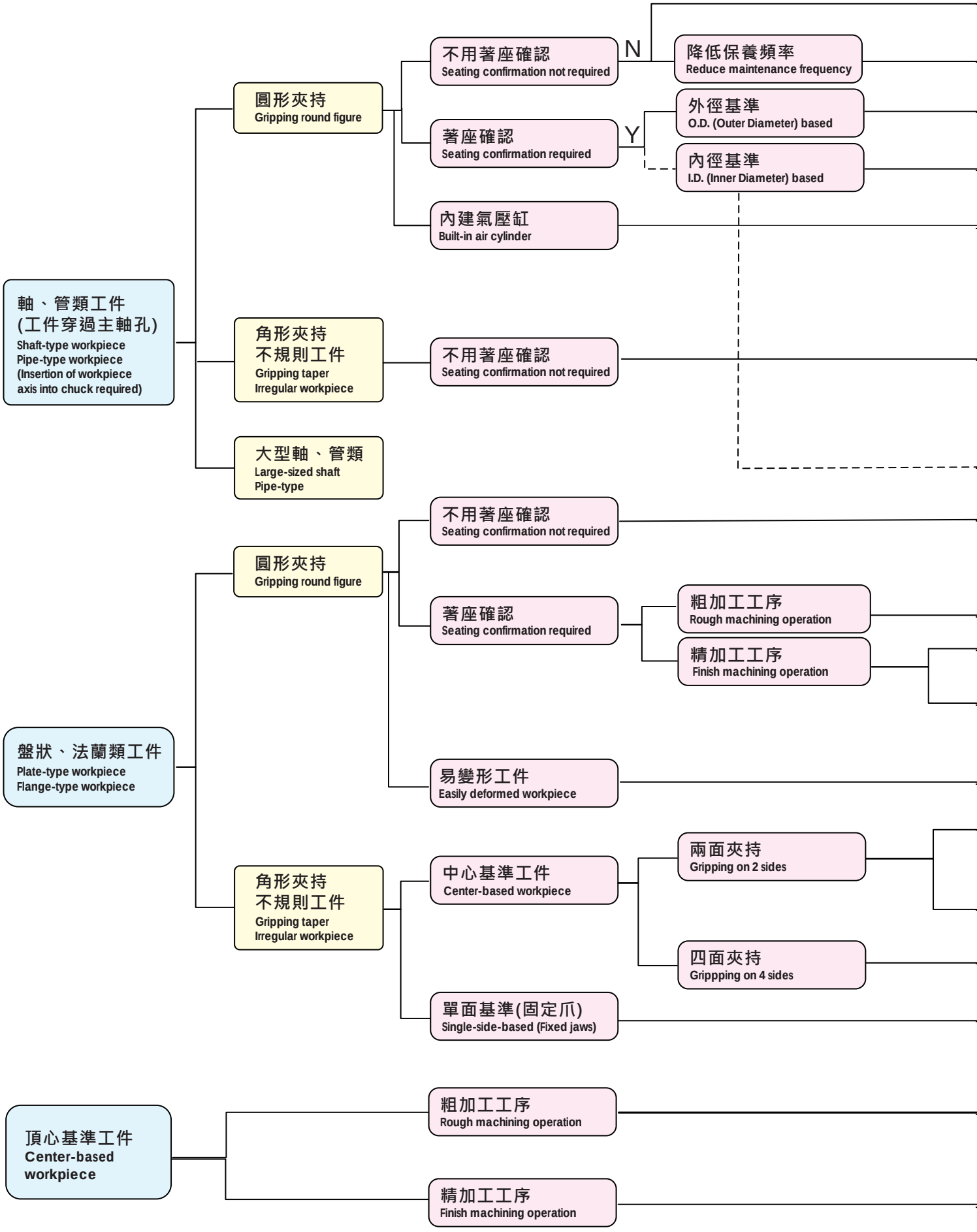

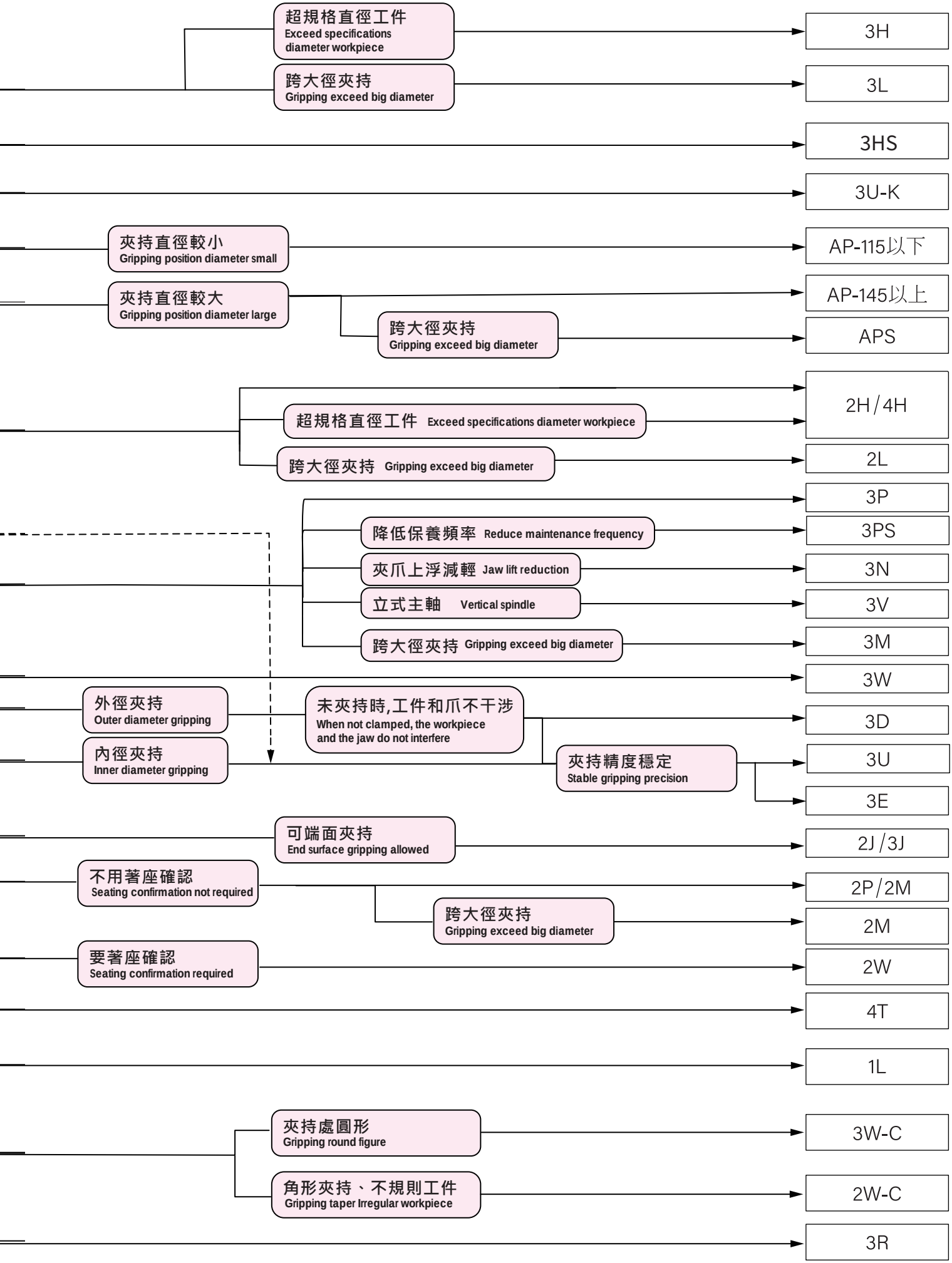

* 本表中的內容如有更改，恕不另行通知。
*The contents in this chart are subject to change without notice for further improvement, etc.

INDEX [Product Description]

動力夾頭 Power Chucks

特殊動力夾頭 Special Purpose Power Chucks

筒夾夾頭 Collet Chucks

立置式夾頭 Stationary Chucks

轉盤用氣壓夾頭 Pneumatic Rotary Chuck

手動夾頭 Manual Chuck

動力定心虎鉗 Power Centering Vise

虎鉗 Vise

展刀搪溝頭 Facing Heads

INDEX [Product Description]

同步夾具 Synchronous Clamp

空油壓迴轉缸 Rotary Cylinders

迴轉分流閥 Rotary Valvies

迴轉接頭 Rotary Joints

油壓中心架 Self-Centering Steady Rest

零附件與其他 Parts and Accessories

3H-2/3H-2A 中空動力夾頭
LARGE THRU-HOLE POWER CHUCK

三爪超大孔徑中空型

- 楔形三爪超大貫通孔徑。
- 摺動面均經硬化及精密研磨，並直接潤滑。
- 高剛性結構及高夾持精度。

- WEDGE-HOOK type 3-jaw with the extra large through-hole.
- Matching surfaces of all parts hardened, ground and lubricated directly.
- High rigidity and high clamping accuracy.

- J 值為連結螺帽未車製螺牙時之孔徑。
  K Default 值為未指定規格之出廠值。
  K max 值為連結螺帽可車製螺牙之最大規格，可依實際需求訂製。
- J is the hole diameter of blank draw nut.
  If not notified, AUTOGRIP will adopt the K Default as K value.
  K is the maximum thread specification and it could be customize.

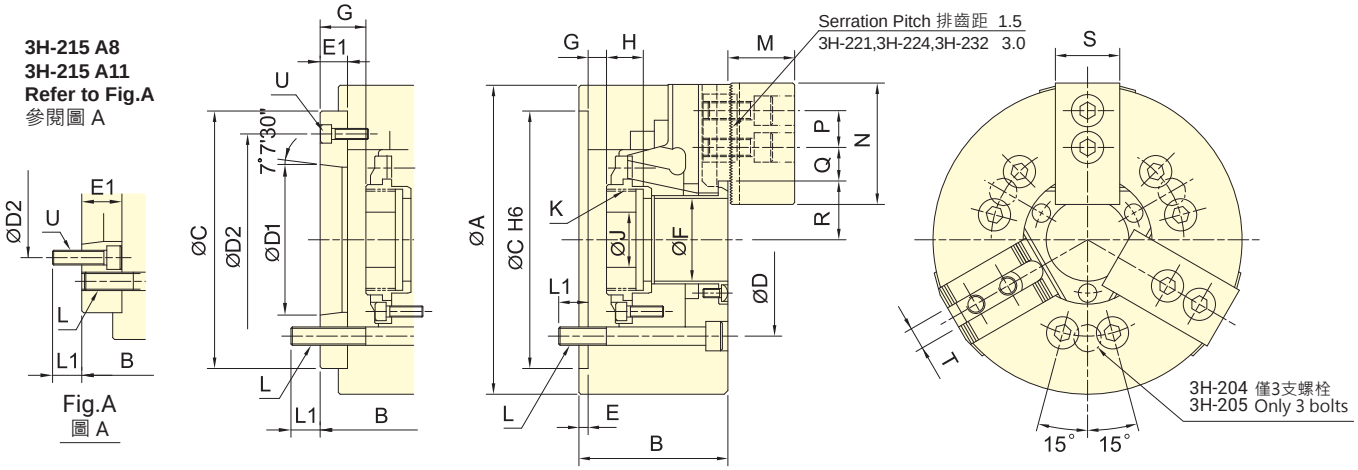

保留規格修改的權利
Subject to technical changes

技術規格 SPECIFICATIONS

型號 Model		楔心行程 Plunger stroke mm	爪行程(直徑) Jaw stroke (Dia.) mm	夾持直徑 Chucking Dia. 最大 Max. mm	夾持直徑 Chucking Dia. 最小 Min. mm	容許最大入力 Max. D.B. pull kN (kgf)	最大夾持力 Max. Clamping force kN (kgf)	最高迴轉數 Max. speed min⁻¹ (r.p.m.)	I Moment of inertia kg・m²	重量 Weight kg		適用迴轉缸 Matching cyl.	最大使用壓力 Max. pressure MPa (kgf/cm²)
3H-204	A4	13	5.5	113	7	13.7(1400)	36.0(3670)	8000	0.012	4.22	5.34	TK-A528	2.0(20)
3H-205	A4	13	5.5	138	10	17.2(1750)	48(4890)	7000	0.02	6.3	7.1	TK-A533	2.5(25)
3H-206	A5	14	6	170	13	23.3(2375)	66.8(6810)	6000	0.06	13.1	14.9	TK-A646	2.5(25)
3H-208	A6	18	7.6	210	17	31.9(3250)	107(10900)	5000	0.15	21.8	23.4	TK-A853	2.6(26)
3H-210	A8	21	8.9	260	37	49.1(5010)	152(15500)	4500	0.32	37.5	43	TK-A1075	3.2(32)
3H-212	A11	25	10.6	315	43	58.8(6000)	157(16010)	3700	0.74	58.6	64.7	TK-A1512	1.9(19)
3H-215	A8	25	10.6	405	49	71(7240)	180(18350)	2500	2.8	127	149	TK-2114	2.1(21)
3H-215	A11	25	10.6	405	49	71(7240)	180(18350)	2500	2.8	127	143.3	TK-2114	2.1(21)
3H-215	A15	25	10.6	405	49	71(7240)	180(18350)	2500	2.8	127	135.6	TK-2114	2.1(21)
3H-18B	A15	23	10.6	456	79	71(7240)	180(18350)	2000	4.8	162.4	173.4	TK-2416	1.9(19)
3H-221	A15	28	12.9	530	105	90(9175)	234(23860)	1800	7.5	223	234	TK-2416	2.4(24)
3H-224	A20	28	12.9	610	135	100(10200)	240(24500)	1500	15.8	270	284	TK-2820	2.1(21)
3H-232	A20	34	18	800	205	100(10200)	240(24500)	1200	47	546	560	TK-2820	2.1(21)

紅色數據為 3H-2A、3H-BA 型之寸法 (The dimensions and the specifications of 3H-2A,3H-BA type are in red data.)

3H-2/3H-2A 中空動力夾頭
LARGE THRU-HOLE POWER CHUCK

外型尺寸 DIMENSIONS

Model		A	B		C	D	D1	D2	E	E1	F	G max.		G min.		H	J
3H-204	A4	113	59	83	85	70.6	63.51	82.6	4	28	32	3.5	31.5	-9.5	18.5	17.5	12
3H-205	A4	138	60	71	110	82.6	63.51	96	4	15	39	1	16	-12	3	20	12
3H-206	A5	170	81	91	140	104.8	82.56	116	5	15	53	13	28	-1	14	17.5	20
3H-208	A6	210	91	103	170	133.4	106.38	150	5	17	66	16.5	33.5	-1.5	15.5	20	30
3H-210	A8	260	102	115	220	171.4	139.72	190	5	18	86	10.5	28.5	-10.5	7.5	25	45
3H-212	A11	315	110	126	300	235	196.87	260	6	22	106	10	32	-15	7	28	50
3H-215	A8	405	132	159	380	330.2	139.72	171.4	6	33	145	11	44	-14	19	39	60
3H-215	A11	405	132	166	380	330.2	196.87	235	6	40	145	11	51	-14	26	39	60
3H-215	A15	405	132	153	380	330.2	285.78	330.2	6	27	145	11	38	-14	13	39	60
3H-18B	A15	456	145	166	380	330.2	285.78	330.2	6	27	165	18	45	-5	22	40	60
3H-221	A15	530	140	161	380	330.2	285.78	330.2	6	27	180	15	42	-13	14	40	80
3H-224	A20	610	145	166	520	463.6	412.78	463.6	6	27	210	15	42	-13	14	41	80
3H-232	A20	800	150	170	520	463.6	412.78	463.6	6	27	275	24	51	-10	17	42	100

Model		K max.		K Default		L	L1		M	N	P	Q max.	Q min.	R max.	R min.	S	T	U
3H-204	A4	M38x1.5		M32x1.5		3~M10	16.0	15	24	52	14	12.75	6.75	25	22.25	23	10	3~M10
3H-205	A4	M45x1.5		M40x1.5		3~M10	14.5	14.5	31	62	14	20.25	6.75	29.5	26.8	25	10	3~M6
3H-206	A5	M60x2		M55x2		6~M10	16.0	16	37	73	20	21.25	9.25	36	33	31	12	3~M6
3H-208	A6	M75x2		M60x2		6~M12	17.0	15	38	95	25	23.7	10.2	45.7	41.9	35	14	3~M6
3H-210	A8	M95x2		M85x2		6~M16	20.0	22	43	110	30	32.2	12.7	56.5	52.05	40	16	3~M8
3H-212	A11	M115x2		M115x2		6~M20	30.0	28	51	130	30	44.75	14.75	67.8	62.5	50	21	3~M10
3H-215	A8	M155x3	M115x2	M155x3	M100x2	6~M24	36.0	24	63	165	43	49.75	19.75	90	84.7	62	25.5	6~M16
3H-215	A11	M155x3		M155x3		6~M24	36.0	31	63	165	43	49.75	19.75	90	84.7	62	25.5	6~M20
3H-215	A15	M155x3		M155x3		6~M24	36.0	34	63	165	43	49.75	19.75	90	84.7	62	25.5	3~M12
3H-18B	A15	M175x3		M175x3		6~M24	38.0	36	63	165	43	64	20.5	102	96.7	62	25.5	3~M12
3H-221	A15	M190x3		M190x3		6~M24	33.0	36	73	180	60	69.5	24.5	113.5	107.1	65	25	3~M12
3H-224	A20	M225x3		M225x3		6~M24	35.0	33	73	180	60	93.5	24.5	128	121.5	65	25	3~M12
3H-232	A20	M295x3		M295x3		6~M24	36.0	34	73	180	60	150.5	24.5	166	157	65	25	3~M12

紅色數據為 3H-2A、3H-BA 型之寸法 (The dimensions and the specifications of 3H-2A,3H-BA type are in red data.)

此中空動力夾頭系列為超大孔徑設計，所推薦 4"~10" 的迴轉缸僅適用於業界標準孔徑之夾頭，請依夾頭孔徑實際需求或安裝界面之不同，選擇其它適用迴轉缸。若有不明瞭之處，請逕洽本公司業務部。

The 3H-2 series are power chucks with extra large thru-hole design.
The rotary cylinders are recommended based on power chucks that from 4"~10" are common used in the industry.
If you find that you need different bore size or installation interface, please just contact us.
We have many standard and customized rotary cylinders for option and meet your needs.
Please contact AUTOGRIP for more detailed information. Thanks.

3H/3H-A 中空動力夾頭
THRU-HOLE POWER CHUCK

三爪高速中空型

- 楔形三爪大貫通孔徑。
- 摺動面均經硬化及精密研磨，並直接潤滑。
- 高剛性結構及高夾持精度。
- WEDGE-HOOK type 3-jaw with the large through-hole.
- Matching surfaces of all parts hardened, ground and lubricated directly.
- High rigidity and high clamping accuracy.

■ J 值為連結螺帽未車製螺牙時之孔徑。
K Default 值為未指定規格之出廠值。
K max 值為連結螺帽可車製螺牙之最大規格，可依實際需求訂製。

■ J is the hole diameter of blank draw nut.
If not notified, AUTOGRIP will adopt the K Default as K value.
K is the maximum thread specification and it could be customize.

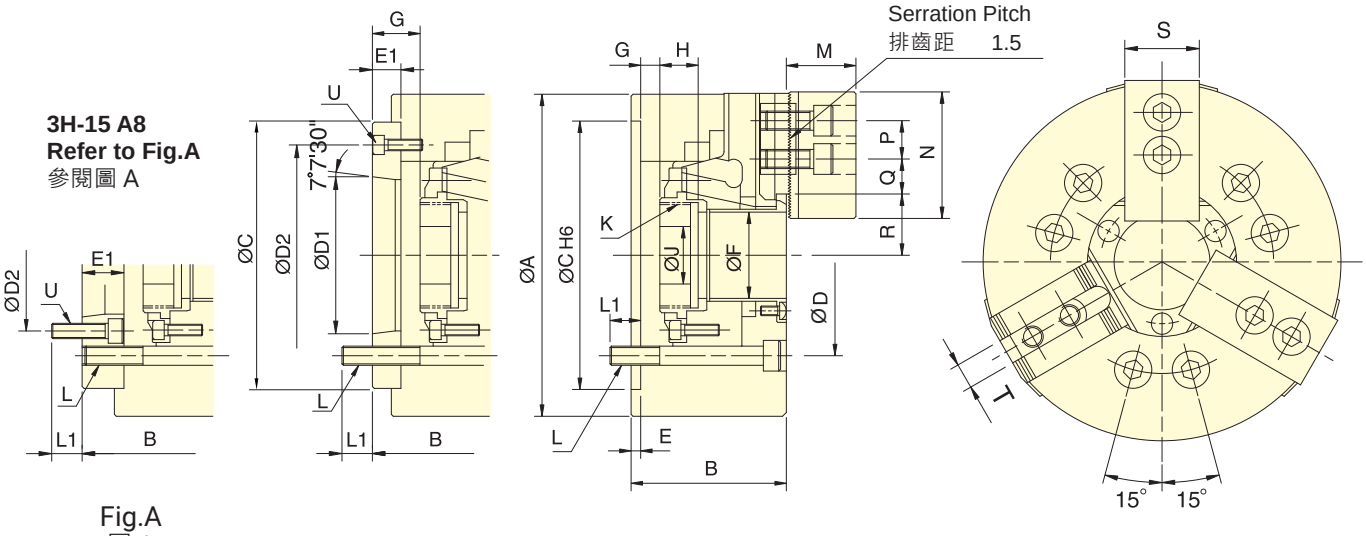

Fig.A
圖 A

3H-A

3H

保留規格修改的權利
Subject to technical changes

技術規格 SPECIFICATIONS

型號 Model		楔心行程 Plunger stroke (mm)	爪行程 (直徑) Jaw stroke (Dia.) (mm)	夾持直徑 Chucking Dia. 最大 Max. (mm)	夾持直徑 Chucking Dia. 最小 Min. (mm)	容許最大入力 Max. D.B. pull (kN (kgf))	最大夾持力 Max. Clamping force (kN (kgf))	最高迴轉數 Max. speed (min⁻¹ (r.p.m.))	I Moment of inertia (kg・m²)	重量 Weight (kg)		適用迴轉缸 Matching cyl.	最大使用壓力 Max. pressure (MPa (kgf/cm²))
3H-12	A8	25	10.6	304	34	54.9(5600)	143.7(14650)	3300	0.77	56.6	59.3	TK-A1291	2.5(25)
3H-15	A8	25	10.6	381	50	71(7250)	179.8(18350)	2500	2.28	120	134	TK-A1512	2.3(23)
3H-15	A11	25	10.6	381	50	71(7250)	179.8(18350)	2500	2.28	120	127	TK-A1512	2.3(23)
3H-18	A11	25	10.6	450	50	71(7250)	180.3(18400)	2000	4.46	160	174	TK-A1512	2.3(23)

外型尺寸 DIMENSIONS

Model		A	B		C	D	D1	D2	E	E1	F	G max.		G min.		H	J
3H-12	A8	304	110	122	220	171.4	139.72	190	6	18	91	10	28	-15	3	28	50
3H-15	A8	381	132	159	300	235	139.72	171.4	6	33	120	11	44	-14	19	39	60
3H-15	A11	381	132	148	300	235	196.87	260	6	22	120	11	33	-14	8	39	60
3H-18	A11	450	132	148	300	235	196.87	260	6	22	120	11	33	-14	8	39	60

Model		K max.		K Default		L	L1		M	N	P	Q max.	Q min.	R max.	R min.	S	T	U
3H-12	A8	M100x2		M100x2		6~M16	23	25	51.3	130	30	44.75	14.75	61.3	56	50	21	3~M8
3H-15	A8	M130x2	M115x2	M130x2	M100x2	6~M20	30	24	63	165	43	49.75	19.75	77.5	72.2	62	25.5 or 22	6~M16
3H-15	A11	M130x2		M130x2		6~M20	30	28	63	165	43	49.75	19.75	77.5	72.2	62	25.5 or 22	3~M10
3H-18	A11	M130x2		M130x2		6~M20	31	29	63	165	43	82.75	21.25	77.5	72.2	62	25.5 or 22	3~M10

紅色數據為 3H-A 型之寸法 (The dimensions and the specifications of 3H-A type are in red data.)

2H/2H-A 中空動力夾頭
THRU-HOLE POWER CHUCK

- 楔形二爪大貫通孔徑，特別適合異形物的夾持。
- 摺動面均經硬化及精密研磨，並直接潤滑。
- 高剛性結構及高夾持精度。

- WEDGE-HOOK type 2-jaw with the large through-hole.
- Matching surfaces of all parts hardened, ground and lubricated directly.
- High rigidity and high clamping accuracy.

- J 值為連結螺帽未車製螺牙時之孔徑。
  K Default 值為未指定規格之出廠值。
  K max 值為連結螺帽可車製螺牙之最大規格，可依實際需求訂製。
- J is the hole diameter of blank draw nut.
  If not notified, AUTOGRIP will adopt the K Default as K value.
  K is the maximum thread specification and it could be customize.

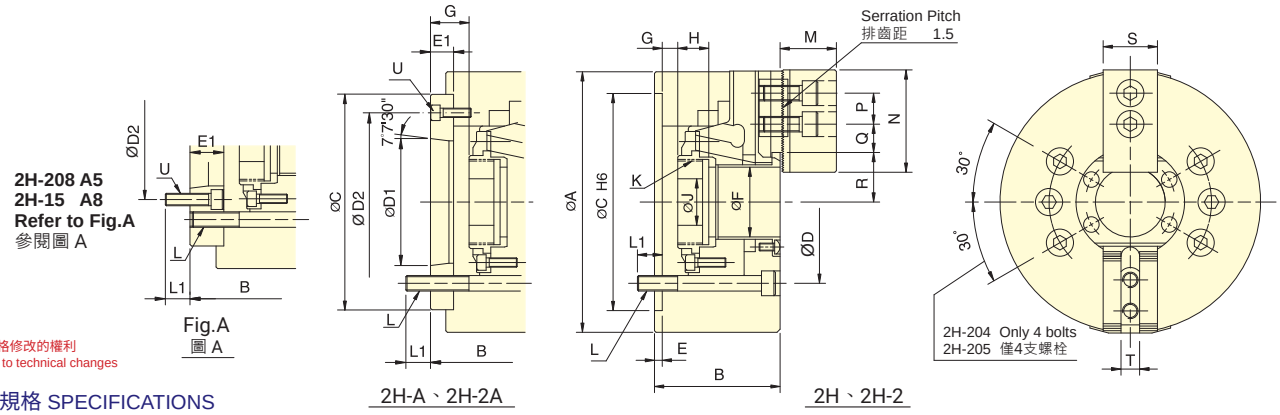

保留規格修改的權利
Subject to technical changes

技術規格 SPECIFICATIONS

型號 Model		楔心行程 Plunger stroke (mm)	爪行程 (直徑) Jaw stroke (Dia.) (mm)	夾持直徑 Chucking Dia. 最大 Max. (mm)	夾持直徑 Chucking Dia. 最小 Min. (mm)	容許最大入力 Max. D.B. pull kN (kgf)	最大夾持力 Max. Clamping force kN (kgf)	最高迴轉數 Max. speed min⁻¹ (r.p.m.)	I Moment of inertia kg・m²	重量 Weight kg		適用迴轉缸 Matching cyl.	最大使用壓力 Max. pressure MPa (kgf/cm²)
2H-204	A4	13	5.5	113	7	9.2(940)	19.4(1980)	8000	0.012	4.2	4.8	TK-A528	1.3(13)
2H-205	A4	13	5.5	138	10	11.4(1167)	32(3260)	7000	0.02	6.8	7.6	TK-A533	1.6(16)
2H-206	A5	14	6	170	13	15.5(1580)	44.4(4530)	6000	0.06	13.1	14.9	TK-A646	1.6(16)
2H-208	A5	18	7.6	210	17	23.1(2360)	57.3(5840)	5000	0.17	21.3	24.2	TK-A853	1.8(18)
2H-208	A6	18	7.6	210	17	23.1(2360)	57.3(5840)	5000	0.17	21.3	22.4	TK-A853	1.8(18)
2H-210	A8	21	8.9	260	37	32.9(3355)	101.9(10385)	4500	0.31	33.5	36.2	TK-A1075	2.2(22)
2H-12	A8	25	10.6	304	34	36.7(3740)	95.8(9780)	3300	0.70	59.7	62.7	TK-A1291	1.7(17)
2H-15	A8	25	10.6	381	50	46.9(4790)	119.6(12200)	2500	2.42	115	129	TK-A1512	1.5(15)
2H-15	A11	25	10.6	381	50	46.9(4790)	119.6(12200)	2500	2.34	115	122	TK-A1512	1.5(15)

外型尺寸 DIMENSIONS

Model		A	B		C	D	D1	D2	E	E1	F	G max.		G min.		H	J
2H-204	A4	113	59	83	85	70.6	63.51	82.6	4	28	32	3.5	31.5	-9.5	18.5	17.5	12
2H-205	A4	138	60	71	110	82.6	63.51	96	4	15	39	1	16	-12	3	20	12
2H-206	A5	170	81	91	140	104.8	82.56	116	5	15	53	13	28	-1	14	17.5	20
2H-208	A5	210	91	109	170	133.4	82.56	104.8	5	23	66	16.5	39.5	-1.5	21.5	20	30
2H-208	A6	210	91	103	170	133.4	106.38	150	5	17	66	16.5	33.5	-1.5	15.5	20	30
2H-210	A8	260	102	115	220	171.4	139.72	190	5	18	86	10.5	28.5	-10.5	7.5	25	45
2H-12	A8	304	110	122	220	171.4	139.72	190	6	18	91	10	28	-15	3	28	50
2H-15	A8	381	133	160	300	235	139.72	171.4	6	33	120	11	44	-14	19	39	60
2H-15	A11	381	133	149	300	235	196.87	260	6	22	120	11	33	-14	8	39	60

Model		K max.		K Default		L	L1		M	N	P	Q max.	Q min.	R max.	R min.	S	T	U
2H-204	A4	M38x1.5		M32x1.5		4~M10	16	15	24	52	14	12.75	6.75	25	22.25	23	10	3~M10
2H-205	A4	M45x1.5		M40x1.5		4~M10	14.5	14.5	31	62	14	20.25	6.75	29.5	26.75	25	10	3~M6
2H-206	A5	M60x2		M55x2		6~M10	16	16	37	73	20	22.75	9.25	36	33	31	12	3~M6
2H-208	A5	M75x2		M60x2		6~M12	17	18	38	95	25	23.7	10.2	45.7	41.9	35	14	6~M10
2H-208	A6	M75x2		M60x2		6~M12	17	15	38	95	25	23.7	10.2	45.7	41.9	35	14	3~M6
2H-210	A8	M95x2		M85x2		6~M16	20	22	43	110	30	32.2	12.7	56.5	52.05	40	16	3~M8
2H-12	A8	M100x2		M100x2		6~M16	23	25	51	130	30	44.75	14.75	61.3	56	50	21	3~M8
2H-15	A8	M130x2	M115x2	M130x2	M100x2	6~M20	30	24	63	165	43	49.75	19.75	77.5	72.2	62	25.5 or 22	6~M16
2H-15	A11	M130x2		M130x2		6~M20	30	28	63	165	43	49.75	19.75	77.5	72.2	62	25.5 or 22	3~M10

紅色數據為 2H-A、2H-2A 型之寸法 (The dimensions and the specifications of 2H-A、2H-2A type are in red data.)

4H/4H-A 中空動力夾頭 THRU-HOLE POWER CHUCK

四爪高速中空型

- 楔形四爪大貫通孔徑，特別適合異形物的夾持。
- 摺動面均經硬化及精密研磨，並直接潤滑。
- 高剛性結構及高夾持精度。

- WEDGE-HOOK type 4-jaw with the large through-hole.
- Matching surfaces of all parts hardened, ground and lubricated directly.
- High rigidity and high clamping accuracy.

■ J 值為連結螺帽未車製螺牙時之孔徑。
K Default 值為未指定規格之出廠值。
K max 值為連結螺帽可車製螺牙之最大規格，可依實際需求訂製。

■ J is the hole diameter of blank draw nut.
If not notified, AUTOGRIP will adopt the K Default as K value.
K is the maximum thread specification and it could be customize.

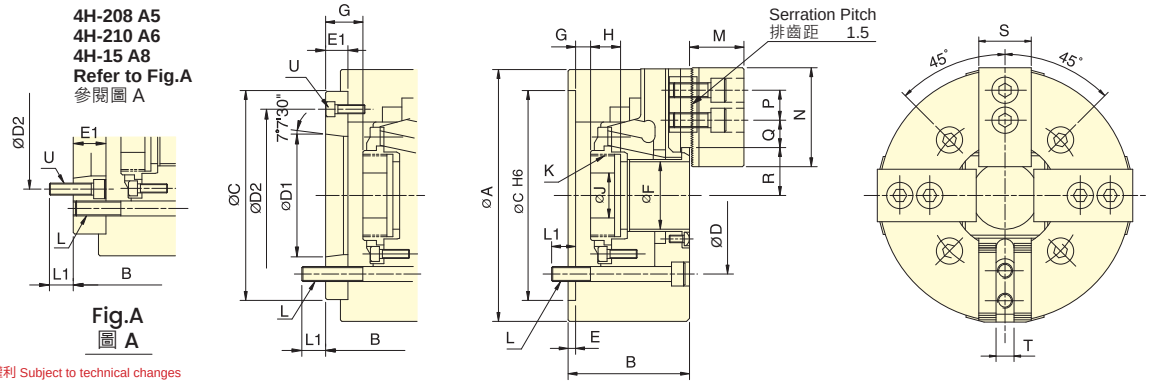

保留規格修改的權利 Subject to technical changes

技術規格 SPECIFICATIONS

型號 Model		楔心行程 Plunger stroke mm	爪行程 (直徑) Jaw stroke (Dia.) mm	夾持直徑 Chucking Dia. 最大 Max. mm	最小 Min. mm	容許最大入力 Max. D.B. pull kN (kgf)	最大夾持力 Max. Clamping force kN (kgf)	最高迴轉數 Max. speed min⁻¹ (r.p.m.)	I Moment of inertia kg・m²	重量 Weight kg		適用迴轉缸 Matching cyl.	最大使用壓力 Max. pressure MPa (kgf/cm²)
4H-206	A5	14	6.0	170	13	23.2(2375)	66.7(6810)	5000	0.06	12.5	16.7	TK-C646	2.5(25)
4H-208	A5	18	7.6	210	17	34.3(3500)	85.8(8750)	4200	0.19	23.5	25.4	TK-A853	2.8(28)
4H-208	A6	18	7.6	210	17	34.3(3500)	85.8(8750)	4200	0.19	23.5	24.3	TK-A853	2.8(28)
4H-210	A6	21	8.9	260	37	49.1(5010)	152.0(15500)	3800	0.4	38.7	44	TK-A1075	3.2(32)
4H-210	A8	21	8.9	260	37	49.1(5010)	152.0(15500)	3800	0.4	38.7	42.3	TK-A1075	3.2(32)
4H-12	A8	25	10.6	304	34	54.9(5600)	143.6(14650)	2700	0.77	62	65.7	TK-A1291	2.5(25)
4H-15	A8	25	10.6	381	50	71(7250)	179.8(18350)	2000	2.31	117.6	130	TK-A1512	2.3(23)
4H-15	A11	25	10.6	381	50	71(7250)	179.8(18350)	2000	2.31	117.6	123.5	TK-A1512	2.3(23)
4H-18	A11	25	10.6	450	50	71(7250)	179.8(18350)	1700	4.35	162.6	168.5	TK-A1512	2.3(23)

外型尺寸 DIMENSIONS

Model		A	B		C	D	D1	D2	E	E1	F	G max.		G min.		H	J
4H-206	A5	170	81	91	140	104.8	82.56	116	5	15	53	13	28	-1	14	17.5	20
4H-208	A5	210	91	109	170	133.4	82.56	104.8	5	23	66	16.5	39.5	-1.5	21.5	20.5	30
4H-208	A6	210	91	103	170	133.4	106.38	150	5	17	66	16.5	33.5	-1.5	15.5	20.5	30
4H-210	A6	260	102	122	220	171.4	106.38	133.4	5	25	86	10.5	35.5	-10.5	14.5	25	45
4H-210	A8	260	102	115	220	171.4	139.72	190	5	18	86	10.5	28.5	-10.5	7.5	25	45
4H-12	A8	304	110	122	220	171.4	139.72	190	6	18	91	10	28	-15	3	28	50
4H-15	A8	381	132	159	300	235	139.72	171.4	6	33	120	11	44	-14	19	39	60
4H-15	A11	381	132	148	300	235	196.87	260	6	22	120	11	33	-14	8	39	60
4H-18	A11	450	132	148	300	235	196.87	260	6	22	120	11	33	-14	8	39	60

Model		K max.		K Default		L	L1		M	N	P	Q max.	Q min.	R max.	R min.	S	T	U
4H-206	A5	M60x2		M55x2		4~M10	16	16	37	73	20	21.25	9.25	36	33	31	12	3~M6
4H-208	A5	M75x2		M60x2		4~M12	17	18	38	95	25	23.7	10.2	45.7	41.9	35	14	6~M10
4H-208	A6	M75x2		M60x2		4~M12	17	15	38	95	25	23.7	10.2	45.7	41.9	35	14	3~M6
4H-210	A6	M95x2		M85x2		4~M16	20	18	43	110	30	32.2	12.7	56.5	52.05	40	16	6~M12
4H-210	A8	M95x2		M85x2		4~M16	20	22	43	110	30	32.2	12.7	56.5	52.05	40	16	3~M8
4H-12	A8	M100x2		M100x2		4~M16	23	25	51.3	130	30	44.75	14.75	61.3	56	50	21	3~M8
4H-15	A8	M130x2	M115x2	M130x2	M100x2	4~M20	30	24	63	165	43	49.75	19.75	77.5	72.2	62	25.5 or 22	6~M16
4H-15	A11	M130x2		M130x2		4~M20	30	28	63	165	43	49.75	19.75	77.5	72.2	62	25.5 or 22	3~M10
4H-18	A11	M130x2		M130x2		4~M20	30	28	63	165	43	82.75	21.25	77.5	72.2	62	25.5 or 22	3~M10

紅色數據為 4H-A 型之寸法 (The dimensions and the specifications of 4H-A type are in red data.)

3P/3P-A 中實動力夾頭 (一)
MINI POWER CHUCK

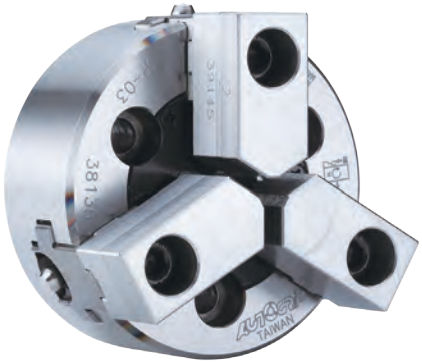

- 楔形三爪小型中實夾頭。
- 摺動面均經硬化及精密研磨，並直接潤滑。
- 適合使用於桌上型車床。
- WEDGE-HOOK type 3-jaw mini power chuck.
- Matching surfaces of all parts hardened, ground and lubricated directly.
- Suitable for bench lathe.

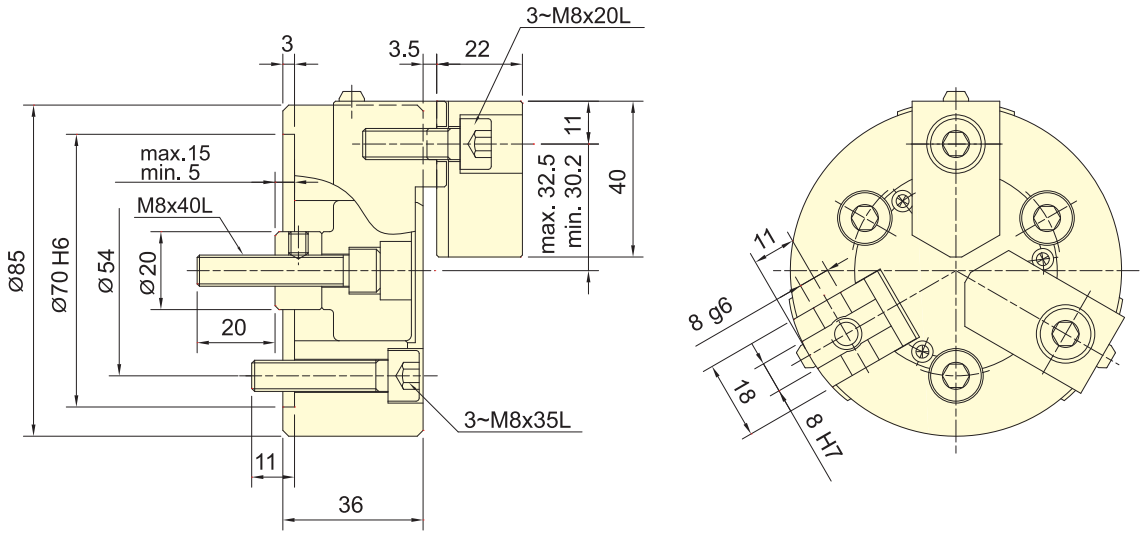

保留規格修改的權利
Subject to technical changes

技術規格 SPECIFICATIONS

型號	楔心行程	爪行程 (直徑)	夾持直徑 Chucking Dia.		容許最大入力	最大夾持力	最高迴轉數	I	重量	適用迴轉缸	最大使用壓力
Model	Plunger stroke	Jaw stroke (Dia.)	最大 Max.	最小 Min.	Max. D.B. pull	Max. Clamping force	Max. speed	Moment of inertia	Weight	Matching cyl.	Max. pressure
	mm	mm	mm	mm	kN (kgf)	kN (kgf)	min^{-1} (r.p.m.)	kg・m^2	kg		MPa (kgf/cm^2)
3P-03	10	4.6	85	3	4.5(460)	11.3(1150)	7000	0.004	1.8	RK-75	1.2(12.4)

搭配之標準生爪 Standard Soft Jaw For 3P-03 Power Chuck
SJ-K03

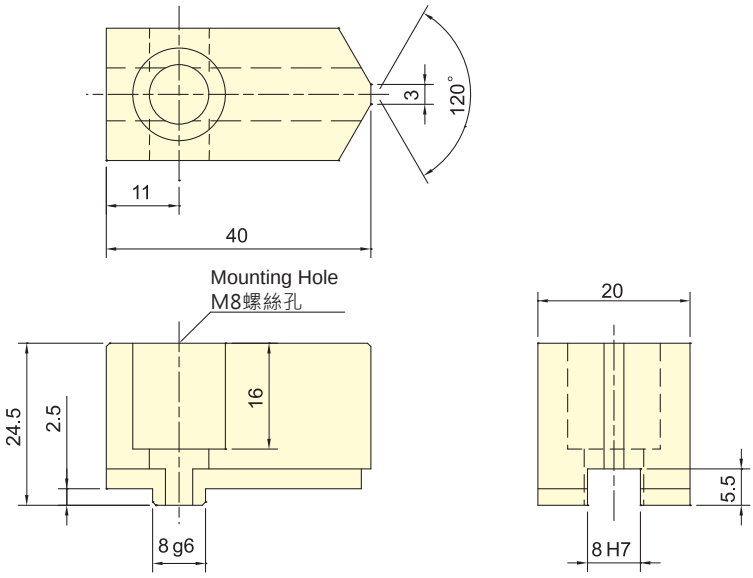

3P/3P-A 中實動力夾頭 (二)
POWER CHUCK

三爪高速中實型

- 楔形三爪中實夾頭。
- 摺動面均經硬化及精密研磨，並直接潤滑。
- 高剛性結構及高夾持精度。
- WEDGE-HOOK type 3-jaw power chuck.
- Matching surfaces of all parts hardened, ground and lubricated directly.
- High rigidity and high clamping accuracy.

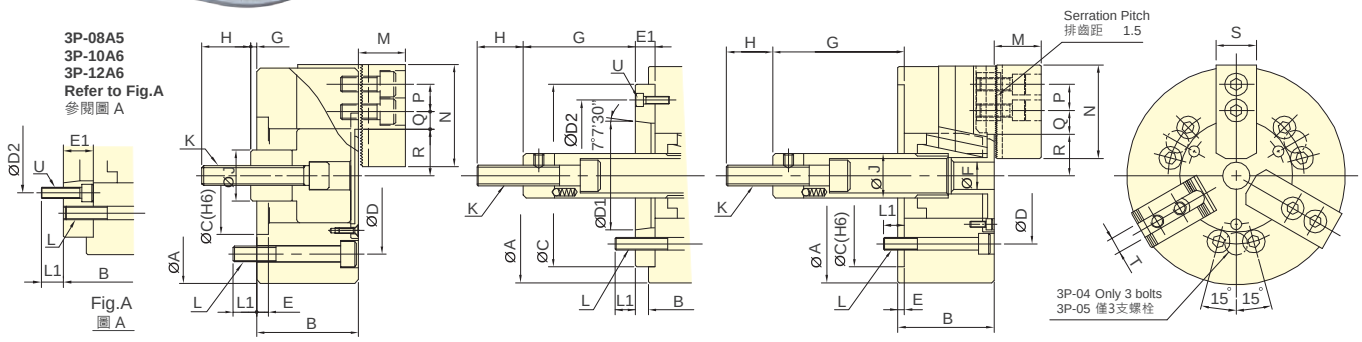

保留規格修改的權利
Subject to technical changes

技術規格 SPECIFICATIONS

型號 Model		楔心行程 Plunger stroke (mm)	爪行程 (直徑) Jaw stroke (Dia.) (mm)	夾持直徑 Chucking Dia. 最大 Max. (mm)	夾持直徑 Chucking Dia. 最小 Min. (mm)	容許最大入力 Max. D.B. pull (kN (kgf))	最大夾持力 Max. Clamping force (kN (kgf))	最高迴轉數 Max. speed (min⁻¹ (r.p.m.))	I Moment of inertia (kg・m²)	重量 Weight (kg)		適用迴轉缸 Matching cyl.	最大使用壓力 Max. pressure (MPa (kgf/cm²))
3P-04		15	6.9	110	5	8.1(830)	22.5(2300)	6000	0.01	4.1	-	RK-75(N) RA-130	2.2(22) 0.6(6)
3P-05		15	6.9	135	14	8.1(830)	25(2550)	5500	0.02	6.2	-	RK-75(N) RA-130	2.2(22) 0.6(6)
3P-06	A5	20	9.2	165	16	17.9(1830)	52.4(5350)	5250	0.05	13	14	RK-100(N) RA-170	2.6(26) 0.6(6)
3P-08	A5	21	9.7	210	21	25(2550)	74.5(7600)	4750	0.14	24	28	RK-125(N) RA-220	2.3(23) 0.5(5)
3P-08	A6	21	9.7	210	21	25(2550)	74.5(7600)	4750	0.14	24	27	RK-125(N) RA-220	2.3(23) 0.5(5)
3P-10	A6	25	8.8	254	24	28.9(2950)	107.8(11000)	4000	0.3	35	42	RK-125(N) RA-220	2.6(26) 0.6(6)
3P-10	A8	25	8.8	254	24	28.9(2950)	107.8(11000)	4000	0.3	35	40	RK-125(N) RA-220	2.6(26) 0.6(6)
3P-12	A6	30	10.5	304	24	41(4180)	155.8(15900)	3360	0.73	59	65	RK-150(N) RA-270	2.6(26) 0.8(8)
3P-12	A8	30	10.5	304	24	41(4180)	155.8(15900)	3360	0.73	59	63	RK-150(N) RA-270	2.6(26) 0.8(8)

外型尺寸 DIMENSIONS

Model		A	B		C	D	D1	D2	E	E1	F	G max.		G min.		H	J
3P-04		110	52	-	60	80	-	-	6	-	-	18	-	3	-	25	26
3P-05		135	55	-	80	100	-	-	7	-	-	9	-	-6	-	35	28
3P-06	A5	165	74	84	140	104.8	82.56	116	5	15	21	102.6	87.6	82.6	67.6	35	34
3P-08	A5	210	85	103	170	133.4	82.56	104.8	5	23	25	127	104	106	83	36	38
3P-08	A6	210	85	97	170	133.4	106.38	150	5	17	25	127	110	106	89	36	38
3P-10	A6	254	89	109	220	171.4	106.38	133.4	5	25	34	158	133	133	108	36	45
3P-10	A8	254	89	102	220	171.4	139.72	190	5	18	34	158	140	133	115	36	45
3P-12	A6	304	106	125	220	171.4	106.38	133.4	6	25	34	163	138	133	108	36	50
3P-12	A8	304	106	118	220	171.4	139.72	190	6	18	34	163	145	133	115	36	50

Model		K	L	L1		M	N	P	Q max.	Q min.	R max.	R min.	S	T	U
3P-04		M10x1.5	3~M8	12	-	24	52	14	11.2	6.7	23.6	20.15	23	10	-
3P-05		M12x1.75	3~M8	14	-	31	62	14	15.7	5.2	30.4	26.95	25	10	-
3P-06	A5	M16x2	6~M10	14	14	37	73	20	18.25	9.25	38.25	33.65	31	12	3~M6
3P-08	A5	M20x2.5	6~M12	20	17	38	95	25	25.25	11.75	46.3	41.45	35	14	6~M10
3P-08	A6	M20x2.5	6~M12	20	18	38	95	25	25.25	11.75	46.3	41.45	35	14	3~M6
3P-10	A6	M20x2.5	6~M16	18	18	43	110	30	35.25	12.75	51.1	46.7	40	16	6~M12
3P-10	A8	M20x2.5	6~M16	18	25	43	110	30	35.25	12.75	51.1	46.7	40	16	3~M8
3P-12	A6	M20x2.5	6~M16	18	18	51	130	30	48.75	12.75	61	55.75	50	18 or 21	6~M12
3P-12	A8	M20x2.5	6~M16	18	25	51	130	30	48.75	12.75	61	55.75	50	18 or 21	3~M8

紅色數據為 3P-A 型之寸法 (The dimensions and the specifications of 3P-A type are in red data.)

3P/3P-A 中實動力夾頭 (三)
POWER CHUCK

三爪高速中實型

- 楔形三爪中實夾頭。
- 摺動面均經硬化及精密研磨，並直接潤滑。
- 高剛性結構及高夾持精度。
- WEDGE-HOOK type 3-jaw power chuck.
- Matching surfaces of all parts hardened, ground and lubricated directly.
- High rigidity and high clamping accuracy.

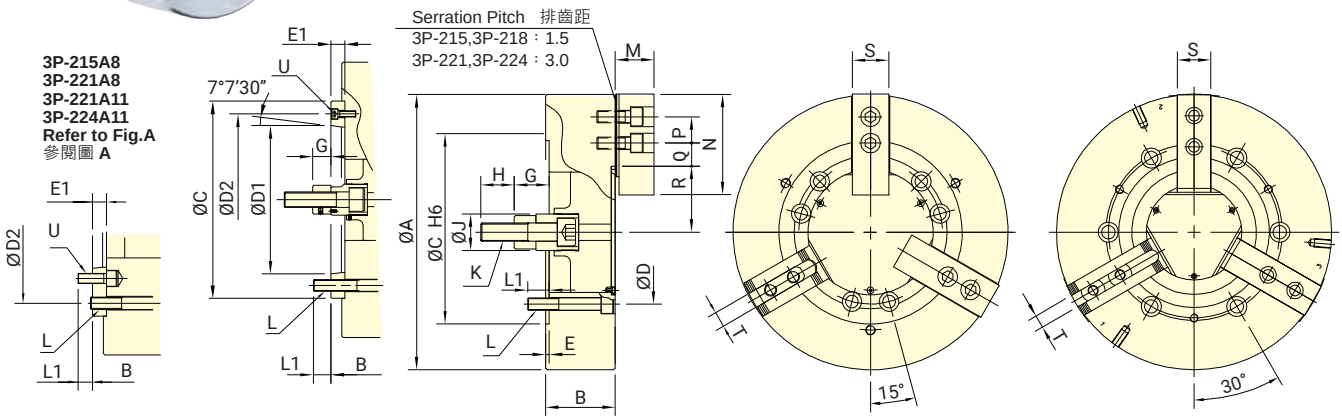

Fig.A 圖A　3P-2A　3P-2　3P-215,3P-218　3P-221,3P-224

保留規格修改的權利
Subject to technical changes

技術規格 SPECIFICATIONS

型號 Model		楔心行程 Plunger stroke (mm)	爪行程 (直徑) Jaw stroke (Dia.) (mm)	夾持直徑 Chucking Dia. 最大 Max. (mm)	夾持直徑 Chucking Dia. 最小 Min. (mm)	容許最大入力 Max. D.B. pull (kN (kgf))	最大夾持力 Max. Clamping force (kN (kgf))	最高迴轉數 Max. speed (min⁻¹ (r.p.m.))	I Moment of inertia (kg・m²)	重量 Weight (kg)		適用迴轉缸 Matching cyl.	最大使用壓力 Max. pressure (MPa (kgf/cm²))
3P-215	A8	35	16	381	50	82(8360)	249(25390)	3000	1.8	109.9	122.4	RH-200 or RK-200(N)	2.8(28)
3P-215	A11	35	16	381	50	82(8360)	249(25390)	3000	1.8	109.9	116	RH-200 or RK-200(N)	2.8(28)
3P-218	A11	35	16	450	60	82(8360)	249(25400)	2800	2.32	124	130	RH-200 or RK-200(N)	2.8(28)
3P-221	A8	35	16	530	59	82(8360)	272.6(27800)	1900	4.9	177	200	RH-200 or RK-200(N)	2.8(28)
3P-221	A11	35	16	530	59	82(8360)	272.6(27800)	1900	4.9	177	194	RH-200 or RK-200(N)	2.8(28)
3P-224	A11	35	16	610	152	82(8360)	272.6(27800)	1750	7	230	246.28	RH-200 or RK-200(N)	2.8(28)
3P-224	A15	35	16	610	152	82(8360)	272.6(27800)	1750	7	230	238.6	RH-200 or RK-200(N)	2.8(28)

外型尺寸 DIMENSIONS

Model		A	B		C	D	D1	D2	E	E1	G max.		G min.		H	J	K
3P-215	A8	381	114	141	300	235	139.72	171.4	6	33	104	71	69	36	55	60	M30x3.5
3P-215	A11	381	114	130	300	235	196.87	260	6	22	104	82	69	47	55	60	M30x3.5
3P-218	A11	450	114	130	300	235	196.87	260	6	22	92	70	57	35	55	60	M30x3.5
3P-221	A8	530	125	152	380	330.2	139.72	171.4	6	33	97	64	62	29	55	60	M30x3.5
3P-221	A11	530	125	146	380	330.2	196.87	235	6	27	97	70	62	35	55	60	M30x3.5
3P-224	A11	610	125	146	380	330.2	196.87	235	6	27	97	70	62	35	55	60	M30x3.5
3P-224	A15	610	125	146	380	330.2	285.78	330.2	6	27	97	70	62	35	55	60	M30x3.5

Model		L	L1		M	N	P	Q max.	Q min.	R max.	R min.	S	T	U
3P-215	A8	6~M20	30	24	63.3	165	43	51.25	18.25	77.5	69.5	62	25.5	6~M16
3P-215	A11	6~M20	30	33	63.3	165	43	51.25	18.25	77.5	69.5	62	25.5	3~M10
3P-218	A11	6~M20	35	33	63.3	165	43	52.75	18.25	108	100	62	25.5	3~M10
3P-221	A8	6~M24	31	24	71	180	60	96.5	24.5	86	78	65	25	6~M16
3P-221	A11	6~M24	31	28	71	180	60	96.5	24.5	86	78	65	25	6~M20
3P-224	A11	6~M24	31	28	71	180	60	96.5	24.5	125	117	65	25	6~M20
3P-224	A15	6~M24	31	34	71	180	60	96.5	24.5	125	117	65	25	3~M12

紅色數據為 3P-A 型之寸法 (The dimensions and the specifications of 3P-A type are in red data.)

2P/2P-A 中實動力夾頭 POWER CHUCK

- 楔形二爪中實夾頭。
- 摺動面均經硬化及精密研磨，並直接潤滑。
- 高剛性結構及高夾持精度。
- WEDGE-HOOK type 2-jaw power chuck.
- Matching surfaces of all parts hardened, ground and lubricated directly.
- High rigidity and high clamping accuracy.

2P-08 A5
2P-10 A6
Refer to Fig.A
參閱圖 A

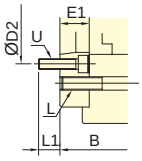

Fig.A
圖 A

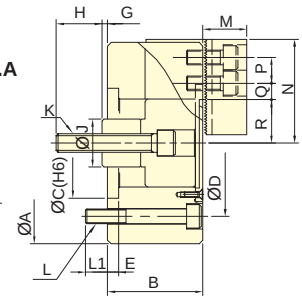

2P-04、2P-05

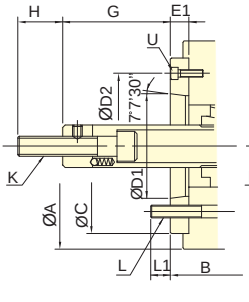

2P-A

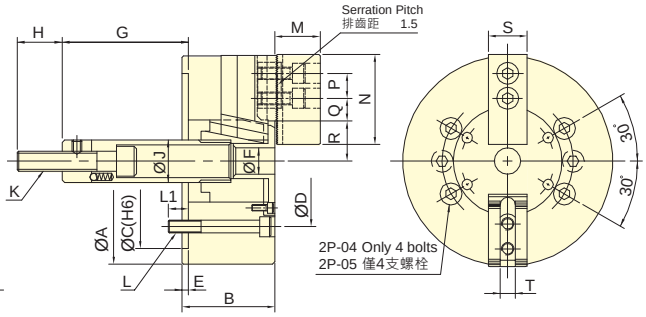

2P

保留規格修改的權利
Subject to technical changes

技術規格 SPECIFICATIONS

型號 Model		楔心行程 Plunger stroke mm	爪行程 (直徑) Jaw stroke (Dia.) mm	夾持直徑 Chucking Dia. 最大 Max. mm	夾持直徑 Chucking Dia. 最小 Min. mm	容許最大入力 Max. D.B. pull kN (kgf)	最大夾持力 Max. Clamping force kN (kgf)	最高迴轉數 Max. speed min⁻¹ (r.p.m.)	I Moment of inertia kg・m²	重量 Weight kg		適用迴轉缸 Matching cyl.	最大使用壓力 Max. pressure MPa (kgf/cm²)
2P-04		15	6.9	110	5	5.3(540)	14.7(1500)	6000	0.01	3.8	-	RK-75(N) RA-130	1.5(15) 0.4(4)
2P-05		15	6.9	135	14	5.3(540)	16.7(1700)	5500	0.02	5.8	-	RK-75(N) RA-130	1.5(15) 0.4(4)
2P-06	A5	20	9.2	165	14	12(1220)	35(3570)	5250	0.04	12	13	RK-100(N) RA-170	1.7(17) 0.4(4)
2P-08	A5	21	9.7	210	17	16.5(1680)	50(5100)	4750	0.13	22	26	RK-125(N) RA-220	1.5(15) 0.4(4)
2P-08	A6	21	9.7	210	17	16.5(1680)	50(5100)	4750	0.13	22	25	RK-125(N) RA-220	1.5(15) 0.4(4)
2P-10	A6	25	8.8	254	22	19.4(1980)	71.5(7300)	4000	0.29	33	42	RK-125(N) RA-220	1.8(18) 0.4(4)
2P-10	A8	25	8.8	254	22	19.4(1980)	71.5(7300)	4000	0.29	33	40	RK-125(N) RA-220	1.8(18) 0.4(4)
2P-12	A8	30	10.5	304	22	27.4(2800)	103.9(10600)	3360	0.70	57	61	RK-150(N)	1.7(17)
2P-15	A11	35	16	381	50	54.9(5600)	164.6(16800)	3000	1.70	96	103	RK-200(N)	1.9(19)

外型尺寸 DIMENSIONS

Model		A	B		C	D	D1	D2	E	E1	F	G max.		G min.		H	J
2P-04		110	52	-	60	80	-	-	6	-	-	18	-	3	-	25	26
2P-05		135	55	-	80	100	-	-	7	-	-	9	-	6	-	35	28
2P-06	A5	165	74	84	140	104.8	82.56	116	5	15	21	102.6	87.6	82.6	67.6	35	34
2P-08	A5	210	85	103	170	133.4	82.56	104.8	5	23	25	127	104	106	83	36	38
2P-08	A6	210	85	97	170	133.4	106.38	150	5	17	25	127	110	106	89	36	38
2P-10	A6	254	89	109	220	171.4	106.38	133.4	5	25	34	158	133	133	108	36	45
2P-10	A8	254	89	102	220	171.4	139.72	190	5	18	34	158	140	133	115	36	45
2P-12	A8	304	106	118	220	171.4	139.72	190	6	18	34	163	145	133	115	36	50
2P-15	A11	381	114	130	300	235	196.87	260	6	22	-	104	82	69	47	55	60

Model		K	L	L1		M	N	P	Q max.	Q min.	R max.	R min.	S	T	U
2P-04		M10x1.5	4~M8	12	-	24	52	14	11.3	8.3	23.3	20.15	23	10	-
2P-05		M12x1.75	4~M8	14	-	31	62	14	13.5	6	30.4	26.95	25	10	-
2P-06	A5	M16x2	6~M10	14	14	37	73	20	18.25	9.25	38.25	33.65	31	12	3~M6
2P-08	A5	M20x2.5	6~M12	20	17	38	95	25	22.3	11.8	46.3	41.45	35	14	6~M10
2P-08	A6	M20x2.5	6~M12	20	18	38	95	25	22.3	11.8	46.3	41.45	35	14	3~M6
2P-10	A6	M20x2.5	6~M16	18	18	43	110	30	30.8	11.3	51.1	46.7	40	16	6~M12
2P-10	A8	M20x2.5	6~M16	18	25	43	110	30	30.8	11.3	51.1	46.7	40	16	6~M8
2P-12	A8	M20x2.5	6~M16	18	25	51	130	30	48.5	12.5	-	-	50	18 or 21	6~M8
2P-15	A11	M30x3.5	6~M20	30	33	63	165	43	48.8	23.3	77.5	69.5	62	25.5	3~M10

紅色數據為 2P-A 型之寸法 (The dimensions and the specifications of 2P-A type are in red data.)

3L/3L-A 超長爪行程動力夾頭
EXTRA LONG JAW STROKE POWER CHUCK

- 曲柄型三爪超大貫通孔徑，超長爪行程。
- 摺動面均經硬化及精密研磨，並直接潤滑。
- 高剛性結構及高夾持精度。
- CRANK type 3-jaw with the large through-hole and extra long jaw stroke.
- Matching surfaces of all parts hardened, ground and lubricated directly.
- High rigidity and high clamping accuracy.

■ J 值為連結螺帽未車製螺牙時之孔徑。
K max 值為連結螺帽可車製螺牙之最大規格，可依實際需求訂製。

■ J is the hole diameter of blank draw nut .
K is the maximum thread specification and it could be customize.

3L-208 A5
3L-210 A6
3L-215 A8
Refer to Fig.A
參閱圖 A

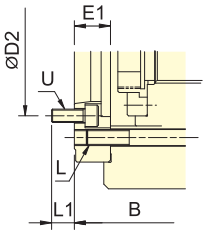

Fig.A
圖 A

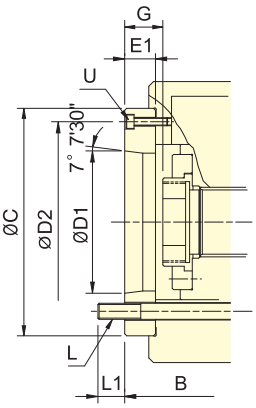

3L-2A

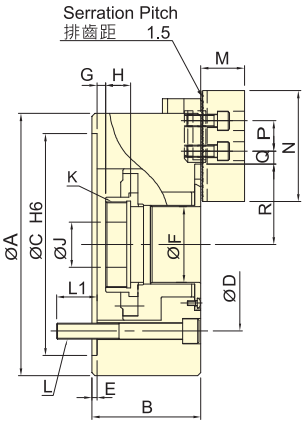

3L-2

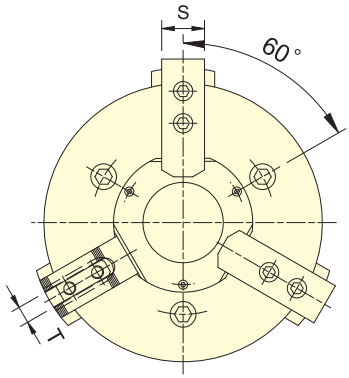

保留規格修改的權利 Subject to technical changes

技術規格 SPECIFICATIONS

型號 Model		楔心行程 Plunger stroke mm	爪行程 (直徑) Jaw stroke (Dia.) mm	夾持直徑 Chucking Dia. 最大 Max. mm	夾持直徑 Chucking Dia. 最小 Min. mm	容許最大入力 Max. D.B. pull kN (kgf)	最大夾持力 Max. Clamping force kN (kgf)	最高迴轉數 Max. speed min⁻¹(r.p.m.)	I Moment of inertia kg・m²	重量 Weight kg		適用迴轉缸 Matching cyl.	最大使用壓力 Max. pressure MPa (kgf/cm²)
3L-205	A4	12	18	138	6	15.6(1590)	17.2(1750)	4200	0.019	7.2	8	TK-A533	2.3(23)
3L-206	A5	15	24	170	24	23.5(2400)	26.0(2650)	3600	0.063	14.7	15.9	TK-C646	2.7(27)
3L-208	A5	20	32	215	30	34.3(3500)	35.0(3570)	3000	0.18	23	25.7	TK-A853	2.8(28)
3L-208	A6	20	32	215	30	34.3(3500)	35.0(3570)	3000	0.18	23	24.6	TK-A853	2.8(28)
3L-210	A6	25	37.5	260	53	47.7(4870)	48.0(4895)	2400	0.35	39.5	46.5	TK-A1075	3.1(31)
3L-210	A8	25	37.5	260	53	47.7(4870)	48.0(4895)	2400	0.35	39.5	45	TK-A1075	3.1(31)
3L-212	A8	30	45	315	61	64.7(6600)	61.0(6220)	2100	0.827	67.3	70.5	TK-A1291	3.0(30)
3L-215	A8	35	52	405	52	84.3(8600)	85.0(8665)	1600	2.58	139	152	TK-A1512-35	2.7(27)
3L-215	A11	35	52	405	52	84.3(8600)	85.0(8665)	1600	2.58	139	145	TK-A1512-35	2.7(27)

外型尺寸 DIMENSIONS

Model		A	B		C	D	D1	D2	E	E1	F	G max.		G min.		H	J
3L-205	A4	138	65	76	110	82.6	63.51	96	4	15	32	1	15	-11	3	20	12
3L-206	A5	170	84	97	140	104.8	82.56	116	5	18	45	6.5	24.5	-8.5	9.5	19	20
3L-208	A5	215	96	114	170	133.4	82.56	104.8	5	23	52	7	30	-13	10	20	30
3L-208	A6	215	96	114	170	133.4	106.38	150	5	23	52	7	30	-13	10	20	30
3L-210	A6	260	108	128	220	171.4	106.38	133.4	5	25	75	8.5	33	-16.5	8	25	45
3L-210	A8	260	108	121	220	171.4	139.72	190	5	18	75	8.5	26.5	-16.5	1.5	25	45
3L-212	A8	315	125	138	220	171.4	139.72	190	5	18	91	15	33	-15	3	30	50
3L-215	A8	405	150	177	300	235	139.72	171.4	6	33	120	12.5	45.5	-22.5	10.5	39	60
3L-215	A11	405	150	166	300	235	196.87	260	6	22	120	12.5	34.5	-22.5	-0.5	39	60

Model		K max.		L	L1		M	N	P	Q max.	Q min.	R max.	R min.	S	T	U
3L-205	A4	M40x1.5		3~M10	15	15	31	62	14	15.75	5.25	38.5	29.5	25	10	3~M6
3L-206	A5	M55x2		3~M10	18	15	37	73	20	15.25	7.75	51	39	31	12	3~M6
3L-208	A5	M60x2		3~M12	18	19	38	95	25	19.25	10.25	63.5	47.5	35	14	6~M10
3L-208	A6	M60x2		3~M12	18	20	38	95	25	19.25	10.25	63.5	47.5	35	14	3~M6
3L-210	A6	M85x2	M60x2	3~M16	24	20	43	110	30	24.75	11.25	80	61.25	40	16	3~M12
3L-210	A8	M85x2		3~M16	24	21	43	110	30	24.75	11.25	80	61.25	40	16	3~M8
3L-212	A8	M100x2		3~M16	24	21	51	130	30	29.75	13.25	96.5	74	50	21	3~M8
3L-215	A8	M130x2		6~M20	33	27.5	63	165	43	34.75	13.75	119	93	62	25.5	6~M16
3L-215	A11	M130x2		6~M20	33	31	63	165	43	34.75	13.75	119	93	62	25.5	3~M10

紅色數據為 3L-A 型之寸法 (The dimensions and the specifications of 3L-A type are in red data.)

2L/2L-A 超長爪行程動力夾頭
EXTRA LONG JAW STROKE POWER CHUCK

二爪中空型

- 曲柄型二爪超大貫通孔徑，超長爪行程。
- 摺動面均經硬化及精密研磨，並直接潤滑。
- 高剛性結構及高夾持精度。
- CRANK type 2-jaw with the large through-hole and extra long jaw stroke.
- Matching surfaces of all parts hardened, ground and lubricated directly.
- High rigidity and high clamping accuracy.

- J 值為連結螺帽未車製螺牙時之孔徑。
  K max 值為連結螺帽可車製螺牙之最大規格，可依實際需求訂製。
- J is the hole diameter of blank draw nut,
  K is the maximum thread specification and it could be customize.

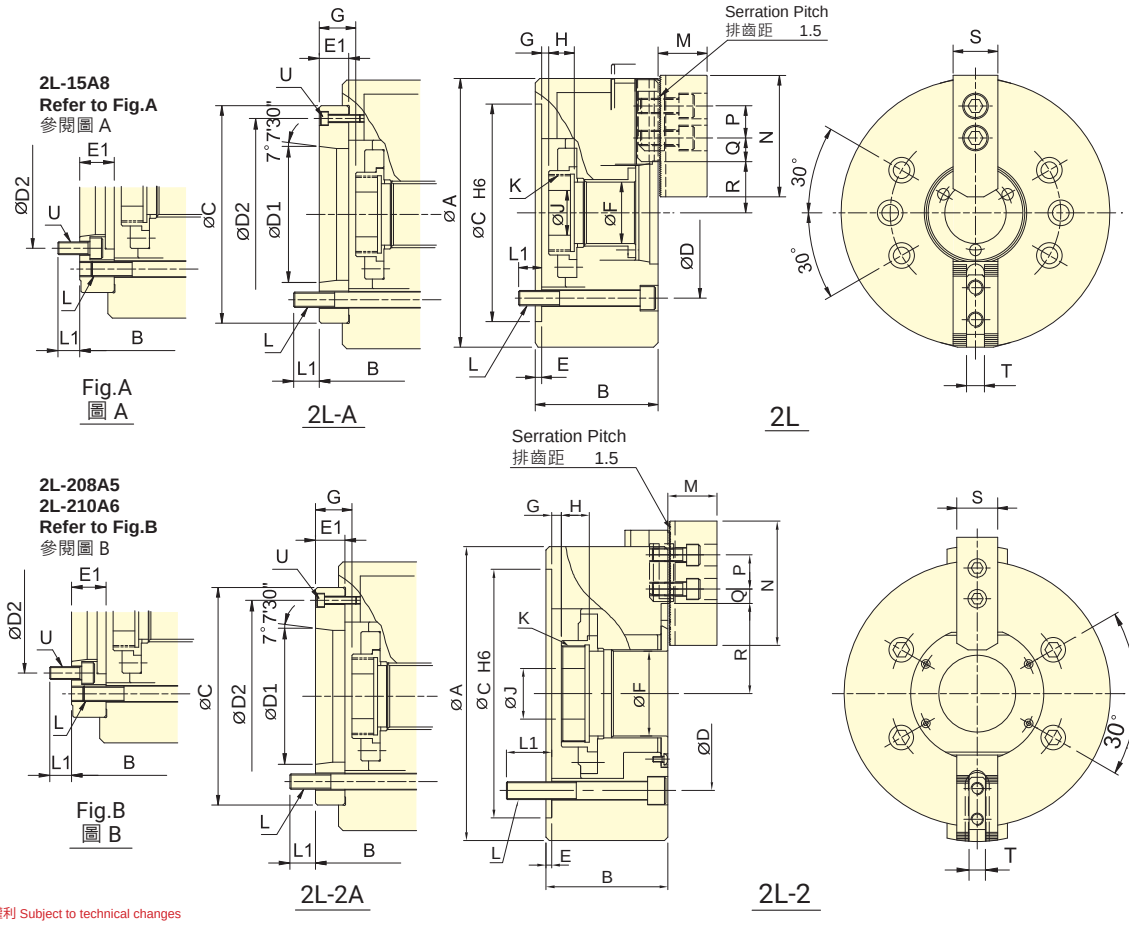

保留規格修改的權利 Subject to technical changes

技術規格 SPECIFICATIONS

型號 Model		楔心行程 Plunger stroke mm	爪行程(直徑) Jaw stroke (Dia.) mm	夾持直徑 Chucking Dia. 最大 Max. mm	夾持直徑 Chucking Dia. 最小 Min. mm	容許最大入力 Max. D.B. pull kN (kgf)	最大夾持力 Max. Clamping force kN (kgf)	最高迴轉數 Max. speed min⁻¹ (r.p.m.)	I Moment of inertia kg・m²	重量 Weight kg		適用迴轉缸 Matching cyl.	最大使用壓力 Max. pressure MPa (kgf/cm²)
2L-205	A4	12	18	138	6	10.4(1060)	11.4(1170)	4200	0.018	6.9	7.7	TK-A533	1.5(15)
2L-206	A5	15	24	170	24	15.7(1600)	17.3(1760)	3600	0.063	14.4	15.6	TK-C646	1.8(18)
2L-208	A5	20	32	215	30	22.9(2330)	27.1(2760)	3000	0.173	22	26	TK-A853	1.9(19)
2L-208	A6	20	32	215	30	22.9(2330)	27.1(2760)	3000	0.173	22	24.2	TK-A853	1.9(19)
2L-210	A6	25	37.5	260	53	31.8(3250)	37.3(3800)	2400	0.33	40	45.5	TK-A1075	2.1(21)
2L-210	A8	25	37.5	260	53	31.8(3250)	37.3(3800)	2400	0.33	40	44	TK-A1075	2.1(21)
2L-12	A8	30	45	304	30	43.1(4400)	50.0(5100)	2100	0.8	60	65.5	TK-A1291	2.0(20)
2L-15	A8	35	52	385	26	56.2(5730)	53.0(5400)	1600	2.52	133	147	TK-A1512-35	1.8(18)
2L-15	A11	35	52	385	26	56.2(5730)	53.0(5400)	1600	2.52	133	140	TK-A1512-35	1.8(18)

紅色數據為 2L-A 型之寸法 (The dimensions and the specifications of 2L-A type are in red data.)

外型尺寸 DIMENSIONS

Model		A	B		C	D	D1	D2	E	E1	F	G max.		G min.		H	J
2L-205	A4	138	65	76	110	82.6	63.51	96	4	15	32	1	15	-11	3	20	12
2L-206	A5	170	84	97	140	104.8	82.56	116	5	18	45	6.5	24.5	-8.5	9.5	19	20
2L-208	A5	215	96	114	170	133.4	82.56	104.8	5	23	52	7	30	-13	10	20	30
2L-208	A6	215	96	114	170	133.4	106.38	150	5	23	52	7	30	-13	10	20	30
2L-210	A6	260	108	128	220	171.4	106.38	133.4	5	25	75	8.5	33	-16.5	8	25	45
2L-210	A8	260	108	121	220	171.4	139.72	190	5	18	75	8.5	26.5	-16.5	1.5	25	45
2L-12	A8	304	127	140	220	171.4	139.72	190	5	18	91	15	33	-15	3	28	50
2L-15	A8	385	150	177	300	235	139.72	171.4	6	33	120	12.5	45.5	-22.5	10.5	39	60
2L-15	A11	385	150	166	300	235	196.87	260	6	22	120	12.5	34.5	-22.5	-0.5	39	60

Model		K max.		L	L1		M	N	P	Q max.	Q min.	R max.	R min.	S	T	U
2L-205	A4	M40x1.5		4~M10	15	15	31	62	14	15.75	5.25	38.5	29.5	25	10	3~M6
2L-206	A5	M55x2		4~M10	18	15	37	73	20	15.25	7.75	51	39	31	12	3~M6
2L-208	A5	M60x2		4~M12	18	19	38	95	25	19.25	10.25	63.5	47.5	35	14	6~M10
2L-208	A6	M60x2		4~M12	18	20	38	95	25	19.25	10.25	63.5	47.5	35	14	3~M6
2L-210	A6	M85x2	M60x2	4~M16	24	20	43	110	30	24.75	11.25	80	61.25	40	16	6~M12
2L-210	A8	M85x2		4~M16	24	21	43	110	30	24.75	11.25	80	61.25	40	16	3~M8
2L-12	A8	M100x2		6~M16	22	19	51	130	30	46.25	19.25	77	54.5	50	21	3~M8
2L-15	A8	M130x2		6~M20	33	27.5	63	165	43	51.25	27.25	94.25	68.25	62	25.5	6~M16
2L-15	A11	M130x2		6~M20	33	31	63	165	43	51.25	27.25	94.25	68.25	62	25.5	3~M10

紅色數據為 2L-A 型之寸法 (The dimensions and the specifications of 2L-A type are in red data.)

超長爪行程動力夾頭
EXTRA LONG JAW STROKE POWER CHUCK

- 曲柄型單爪中實夾頭，超長爪行程。
- 適用於治具與異型工件的夾持。
- 高剛性結構及高夾持精度。
- CRANK type single-jaw with the large through-hole and extra long jaw stroke.
- Suitable for clamping the jig or irregular work piece.
- High rigidity and high clamping accuracy.

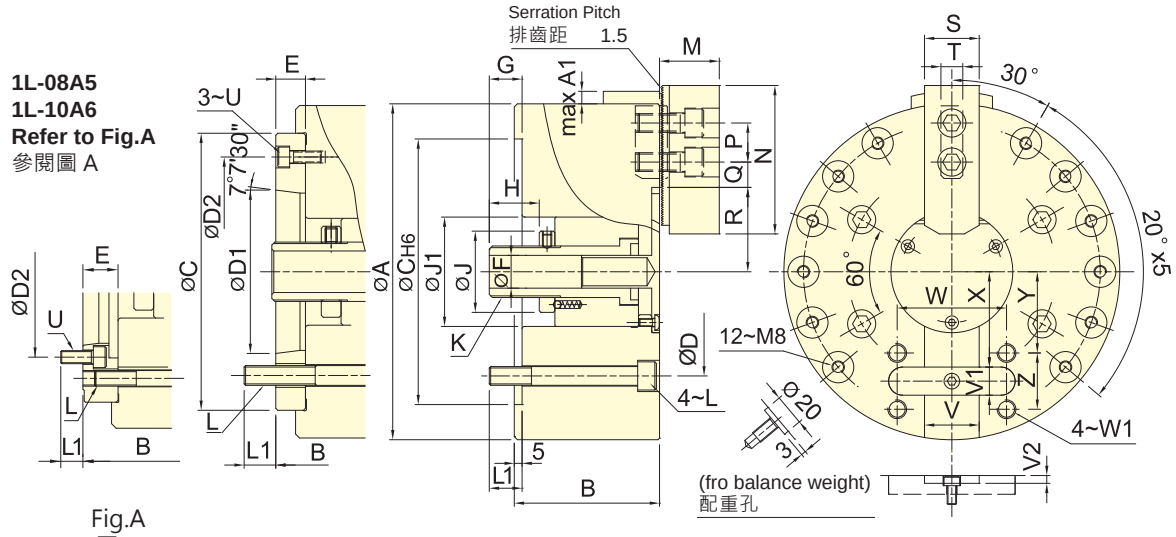

保留規格修改的權利
Subject to technical changes

技術規格 SPECIFICATIONS

型號 Model		楔心行程 Plunger stroke mm	爪行程 Jaw stroke mm	夾持直徑 Chucking Dia. 最大 Max. mm	最小 Min. mm	容許最大入力 Max. D.B. pull kN (kgf)	最大夾持力 Max. Clamping force kN (kgf)	最高迴轉數 Max. speed min⁻¹ (r.p.m.)	I Moment of inertia kg・m²	重量 Weight kg		適用迴轉缸 Matching cyl.	最大使用壓力 Max. pressure MPa (kgf/cm²)
1L-06	A5	20	16	168	5	12.3(1250)	27.3(2780)	3800	0.05	12.5	14.3	RK-100	1.7(17.5)
1L-08	A5	25	20	215	7	15.7(1600)	37.2(3800)	3000	0.15	24.2	27.1	RK-125	1.4(14.3)
1L-08	A6	25	20	215	7	15.7(1600)	37.2(3800)	3000	0.15	24.2	25.3	RK-125	1.4(14.3)
1L-10	A6	30	24	254	17	21.6(2200)	48.5(4950)	2400	0.28	38.8	46	RK-150	1.3(13.7)
1L-10	A8	30	24	254	17	21.6(2200)	48.5(4950)	2400	0.28	38.8	44.3	RK-150	1.3(13.7)

外型尺寸 DIMENSIONS

Model		A	A1	B		C	D	D1	D2	E	F	G max.	G min.	H	J	J1	K max.	L	L1	
1L-06	A5	168	9.5	80	90	140	104.8	82.56	116	15	21	37	17	25	46	54	M30x1.5	M10	16	16
1L-08	A5	215	8	93	111	170	133.4	82.56	104.8	23	21	46	21	32	52	70	M33x1.5	M12	21	19
1L-08	A6	215	8	93	105	170	133.4	106.38	150	17	21	46	21	32	52	70	M33x1.5	M12	21	20
1L-10	A6	254	13.5	108	128	220	171.4	106.38	133.4	25	30	47	17	30	62	90	M45x1.5	M16	25	20
1L-10	A8	254	13.5	108	121	220	171.4	139.72	190	18	30	47	17	30	62	90	M45x1.5	M16	25	27

Model		M	N	P	Q max.	Q min.	R max.	R min.	S	T	U	V(H6)	V1(h9)	V2	W	W1	X	Y	Z
1L-06	A5	37	73	20	19.75	7.75	46	30	31	12	M6	30	15	4.5	64	M10	44.5	36	30
1L-08	A5	38	95	25	25.25	10.25	54	34	35	14	M10	35	18	4.5	70	M12	61	52	36
1L-08	A6	38	95	25	25.25	10.25	54	34	35	14	M6	35	18	4.5	70	M12	61	52	36
1L-10	A6	43	110	30	33.75	11.25	67	43	40	16	M8	40	20	5	90	M14	71	58.5	45
1L-10	A8	43	110	30	33.75	11.25	67	43	40	16	M8	40	20	5	90	M14	71	58.5	45

紅色數據為 1L-A 型之寸法 (The dimensions and the specifications of 1L-A type are in red data.)

中實長爪行程夾頭 (一)
LONG JAW STROKE POWER CHUCK

- 楔形三爪中實夾頭，長爪行程。
- 摺動面均經硬化及精密研磨，並直接潤滑。
- 高剛性結構及高夾持精度。
- WEDGE-HOOK type 3-jaw power chuck and long jaw stroke.
- Matching surfaces of all parts hardened, ground and lubricated directly.
- High rigidity and high clamping accuracy.

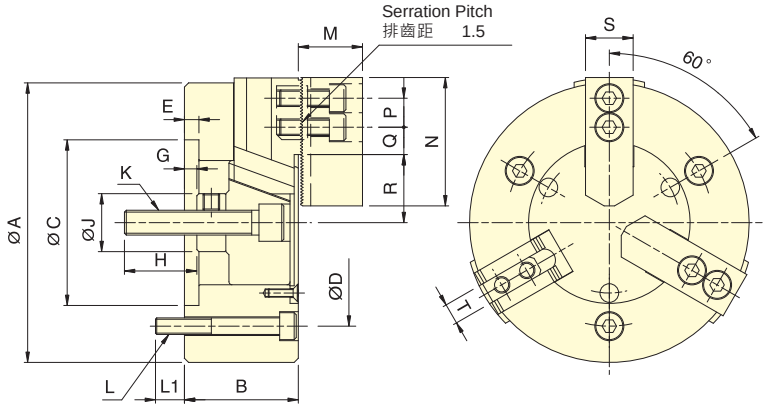

3M-05

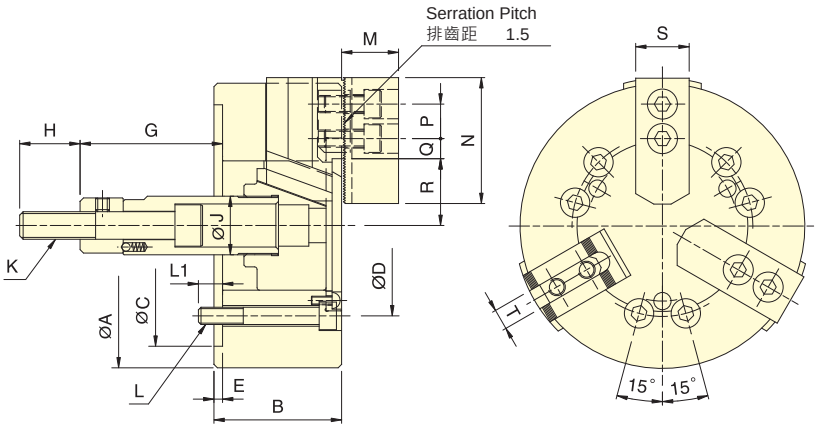

3M-06~3M-12

技術規格 SPECIFICATIONS

型號 Model	楔心行程 Plunger stroke (mm)	爪行程 (直徑) Jaw stroke (Dia.) (mm)	夾持直徑 Chucking Dia. 最大 Max. (mm)	夾持直徑 Chucking Dia. 最小 Min. (mm)	容許最大入力 Max. D.B. pull (kN (kgf))	最大夾持力 Max. Clamping force (kN (kgf))	最高迴轉數 Max. speed (min⁻¹ (r.p.m.))	I Moment of inertia (kg・m²)	重量 Weight (kg)	適用迴轉缸 Matching cyl.	最大使用壓力 Max. pressure (MPa (kgf/cm²))
3M-05	15	10.9	135	14	9.8 (1000)	23 (2350)	4500	0.02	6.0	RK-75(N)	2.7(27)
3M-06	20	14.5	165	14	21.6 (2200)	50 (3680)	4000	0.04	12.2	RK-100(N)	3.0(30)
3M-08	23	16.7	210	17	29.4 (3000)	72 (7340)	3500	0.13	23.0	RK-125(N)	2.9(29)
3M-10	27	19.6	254	22	39.2 (4000)	102 (10400)	3000	0.3	34.3	RK-150(N)	2.8(28)
3M-12	30	21.8	304	26	54.0 (5500)	150 (15300)	2500	0.71	59.4	RK-150(N)	3.6(36)

外型尺寸 DIMENSIONS

Model	A	B	C(H6)	D	E	G max.	G min.	H	J	K
3M-05	135	55	80	100	7	6	-9	35	28	M12x1.75
3M-06	165	74	140	104.8	5	101.6	81.6	36	34	M16x2
3M-08	210	85	170	133.4	5	129	106	36	38	M20x2.5
3M-10	254	89	220	171.4	5	160	133	36	45	M20x2.5
3M-12	304	106	220	171.4	6	70	40	46	50	M24x3

Model	L	L1	M	N	P	Q max.	Q min.	R max.	R min.	S	T
3M-05	3~M8	14	31	62	14	15.5	5	32.9	27.45	25	10
3M-06	6~M10	14	37	73	20	17	8	38.7	31.45	31	12
3M-08	6~M12	20	38	95	25	22.3	8.8	47.5	39.15	35	14
3M-10	6~M16	18	43	110	30	32.3	12.8	53.9	44.1	40	16
3M-12	6~M16	18	51	130	30	47.8	13.3	62.5	51.6	50	21

中實長爪行程夾頭 (二)
LONG JAW STROKE POWER CHUCK

- 楔形三爪中實夾頭，長爪行程。
- 摺動面均經硬化及精密研磨，並直接潤滑。
- 高剛性結構及高夾持精度。
- WEDGE-HOOK type 3-jaw power chuck and long jaw stroke.
- Matching surfaces of all parts hardened, ground and lubricated directly.
- High rigidity and high clamping accuracy.

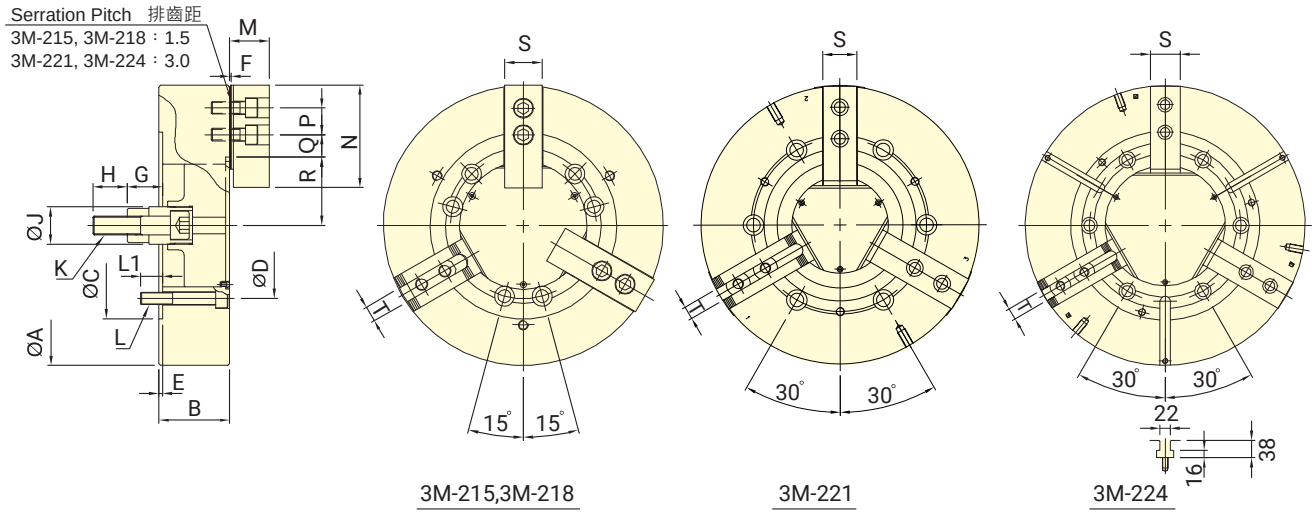

保留規格修改的權利
Subject to technical changes

技術規格 SPECIFICATIONS

型號 Model	楔心行程 Plunger stroke (mm)	爪行程 (直徑) Jaw stroke (Dia.) (mm)	夾持直徑 Chucking Dia. 最大 Max. (mm)	夾持直徑 Chucking Dia. 最小 Min. (mm)	容許最大入力 Max. D.B. pull kN (kgf)	最大夾持力 Max. Clamping force kN (kgf)	最高迴轉數 Max. speed min⁻¹ (r.p.m.)	I Moment of inertia kg・m²	重量 Weight kg	適用迴轉缸 Matching cyl.	最大使用壓力 Max. pressure MPa (kgf/cm²)
3M-215	35	25.4	381	20	91.0 (9280)	158.9 (16200)	2300	1.8	96	RK-200(N)	3.0(30)
3M-218	35	25.4	450	51	91.0 (9280)	158.9 (16200)	2000	2.32	124	RK-200(N)	3.0(30)
3M-221	35	25.4	530	53	91.0 (9280)	158.9 (16200)	1350	4.9	175	RK-200(N)	3.0(30)
3M-224	35	25.4	610	160	91.0 (9280)	158.9 (16200)	1250	7.2	225	RK-200(N)	3.0(30)

外型尺寸 DIMENSIONS

Model	A	B	C(H6)	D	E	F	G max.	G min.	H	J
3M-215	381	114	300	235	6	2	104	69	55	60
3M-218	450	114	300	235	6	2	92	57	55	60
3M-221	530	125	380	330.2	6	3	97	62	55	60
3M-224	610	125	380	330.2	6	3	97	62	55	60

Model	K	L	L1	M	N	P	Q max.	Q min.	R max.	R min.	S	T
3M-215	M30x3.5	6~M20	30	63.3	165	43	49.75	18.25	79	66.3	62	25.5
3M-218	M30x3.5	6~M20	35	63.3	165	43	51.25	18.25	109.5	96.8	62	25.5
3M-221	M30x3.5	6~M24	31	71	180	60	90.5	24.5	92	79.3	65	25
3M-224	M30x3.5	6~M24	31	71	180	60	90	24	131	118.3	65	25

中實長爪行程夾頭
LONG JAW STROKE POWER CHUCK

- 楔形二爪中實夾頭，長爪行程。
- 摺動面均經硬化及精密研磨，並直接潤滑。
- 高剛性結構及高夾持精度。
- WEDGE-HOOK type 2-jaw power chuck and long jaw stroke.
- Matching surfaces of all parts hardened, ground and lubricated directly.
- High rigidity and high clamping accuracy.

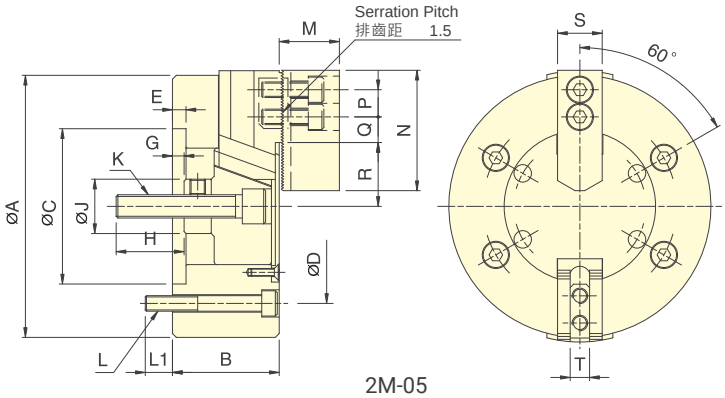

2M-05

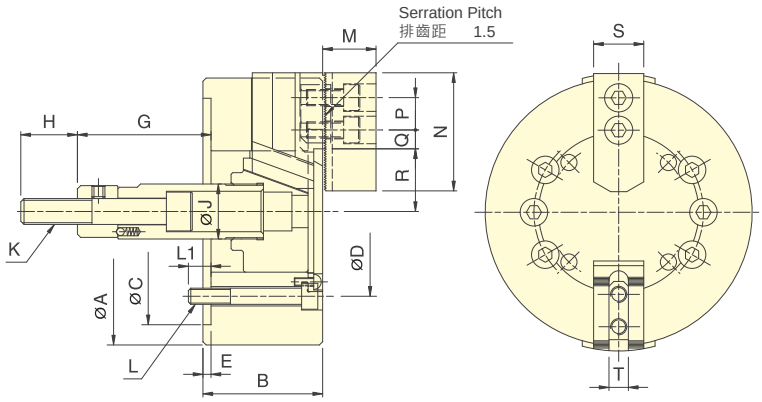

2M-06~2M-12

技術規格 SPECIFICATIONS

型號 Model	楔心行程 Plunger stroke (mm)	爪行程 (直徑) Jaw stroke (Dia.) (mm)	夾持直徑 Chucking Dia. 最大 Max. (mm)	夾持直徑 Chucking Dia. 最小 Min. (mm)	容許最大入力 Max. D.B. pull (kN (kgf))	最大夾持力 Max. Clamping force (kN (kgf))	最高迴轉數 Max. speed (min^{-1} (r.p.m.))	I Moment of inertia (kg・m^2)	重量 Weight (kg)	適用迴轉缸 Matching cyl.	最大使用壓力 Max. pressure (MPa (kgf/cm^2))
2M-05	15	10.9	135	14	6.5(660)	11(1120)	4500	0.02	6.0	RK-75(N)	1.8(18)
2M-06	20	14.5	165	14	14.3(1460)	24(2450)	4000	0.04	12.2	RK-100(N)	2.0(20)
2M-08	23	16.7	210	17	19.6(2000)	36.6(3730)	3500	0.13	23.0	RK-125(N)	1.9(19.3)
2M-10	27	19.6	254	22	26.1(2660)	49.3(5030)	3000	0.30	34.3	RK-150(N)	1.8(18.6)
2M-12	30	21.8	304	26	36(3670)	66(6730)	2500	0.71	59.1	RK-150(N)	2.4(24)

外型尺寸 DIMENSIONS

Model	A	B	C(H6)	D	E	G max.	G min.	H	J
2M-05	135	55	80	100	7	6	-9	35	28
2M-06	165	74	140	104.8	5	101.6	81.6	36	34
2M-08	210	85	170	133.4	5	129	106	36	38
2M-10	254	89	220	171.4	5	160	133	36	45
2M-12	304	106	220	171.4	6	70	40	46	50

Model	K	L	L1	M	N	P	Q max.	Q min.	R max.	R min.	S	T
2M-05	M12x1.75	4~M8	14	31	62	14	15.5	5	32.9	27.45	25	10
2M-06	M16x2	6~M10	14	37	73	20	17	8	38.7	31.45	31	12
2M-08	M20x2.5	6~M12	20	38	95	25	22.3	8.8	47.5	39.15	35	14
2M-10	M20x2.5	6~M16	18	43	110	30	32.3	12.8	53.9	44.1	40	16
2M-12	M24x3	6~M16	18	51	130	30	47.8	13.3	62.5	51.6	50	21

3V-A

立車用中實動力夾頭 (一)
POWER CHUCK FOR VERTICAL LATHE

三爪中實防水防屑型

- 楔形三爪中實夾頭。
- 防切屑及防水設計，特別適合使用於立式車床。
- WEDGE-HOOK type 3-jaw high speed power chuck.
- Sealed against swarf, chips and coolant, suitable for vertical lathe.

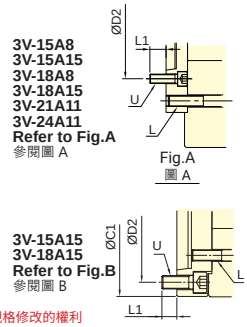

Fig.A 圖 A

Fig.B 圖 B

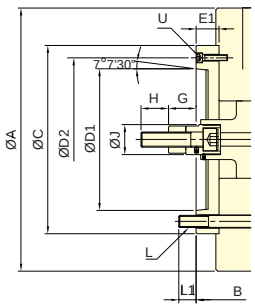

3V-A

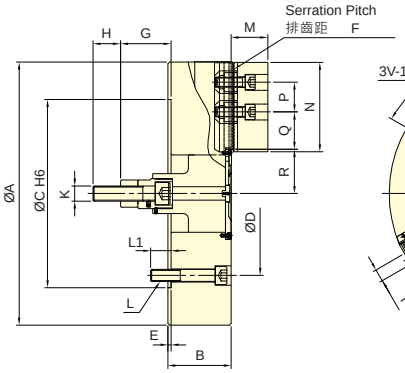

3V

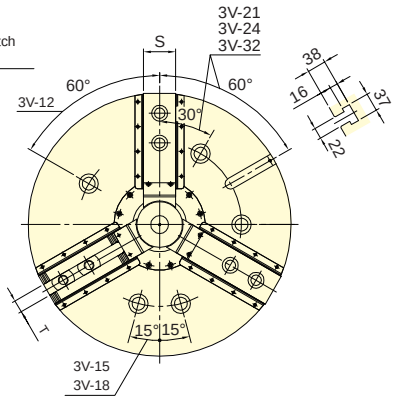

保留規格修改的權利
Subject to technical changes

技術規格 SPECIFICATIONS

型號 Model		楔心行程 Plunger stroke mm	爪行程 (直徑) Jaw stroke (Dia.) mm	夾持直徑 Chucking Dia. 最大 Max. mm	最小 Min. mm	容許最大入力 Max. D.B. pull kN (kgf)	最大夾持力 Max. Clamping force kN (kgf)	最高迴轉數 Max. speed min⁻¹ (r.p.m.)	I Moment of inertia kg・m²		重量 Weight kg		適用迴轉缸 Matching cyl.	最大使用壓力 Max. pressure MPa (kgf/cm²)
3V-12	A8	30	12.7	304	30	41(4180)	156(15900)	3150	0.73	0.79	62.9	68.7	RK-150 RE-150	2.6(26)
3V-15	A8	35	16	381	30	81.9(8360)	245.1(25000)	2900	1.97	2.27	105.5	128.5	RK-200 RE-200K	2.8(28) 3.0(30)
3V-15	A11	35	16	381	30	81.9(8360)	245.1(25000)	2900	1.97	2.27	105.5	127		
3V-15	A15	35	16	381	30	81.9(8360)	245.1(25000)	2900	3.33	2.67	105.5	142		
3V-18	A8	35	16	450	80	81.9(8360)	245.1(25000)	2600	3.33	3.62	132.7	155.5		
3V-18	A11	35	16	450	80	81.9(8360)	245.1(25000)	2600	3.33	3.63	132.7	154.5		
3V-18	A15	35	16	450	80	81.9(8360)	245.1(25000)	2600	6.83	4.02	132.7	165		
3V-21	A11	35	16	530	62	81.9(8360)	271.6(27700)	1800	6.83	7.46	196.5	227		
3V-21	A15	35	16	530	62	81.9(8360)	271.6(27700)	1800	6.83	7.37	196.5	221		
3V-24	A11	35	16	610	136	81.9(8360)	271.6(27700)	1700	11.19	11.83	241.7	272.8		
3V-24	A15	35	16	610	136	81.9(8360)	271.6(27700)	1700	11.19	11.73	241.7	266		
3V-32	A15	35	16	800	136	81.9(8360)	271.6(27700)	1100	28.97	29.51	353.6	378		

外型尺寸 DIMENSIONS

Model		A	B		C	C1	D	D1	D2	E	E1	F	G max.		G min.		H	J
3V-12	A8	304	107	141	220	-	171.4	139.72	190	6	40	1.5	113	73	83	43	36	50
3V-15	A8	381	116	164	300	-	235	139.72	171.4	6	54	1.5	153	99	118	64	55	60
3V-15	A11	381	116	168	300	-	235	196.87	260	6	58	1.5	153	95	118	60	55	60
3V-15	A15	381	116	172	-	380	235	285.78	330.2	6	62	1.5	153	91	118	56	55	60
3V-18	A8	450	116	164	300	-	235	139.72	171.4	6	54	1.5	153	99	118	64	55	60
3V-18	A11	450	116	168	300	-	235	196.87	260	6	58	1.5	153	95	118	60	55	60
3V-18	A15	450	116	172	-	380	235	285.78	330.2	6	62	1.5	153	91	118	56	55	60
3V-21	A11	530	127	167	380	-	330.2	196.87	235	6	46	3	137	91	102	56	55	60
3V-21	A15	530	127	167	380	-	330.2	285.78	330.2	6	46	3	137	91	102	56	55	60
3V-24	A11	610	127	167	380	-	330.2	196.87	235	6	46	3	137	91	102	56	55	60
3V-24	A15	610	127	167	380	-	330.2	285.78	330.2	6	46	3	137	91	102	56	55	60
3V-32	A15	800	127	167	380	-	330.2	285.78	330.2	6	46	3	137	91	102	56	55	60

Model		K	L	L1		M	N	P	Q max.	Q min.	R max.	R min.	S	T	U
3V-12	A8	M20x2.5	3~M16	24	24	54	130	30	47.5	16	61	54.65	50	21	3~M8
3V-15	A8	M30x3.5	6~M20	35	24	66	165	43	51.25	18.25	77.5	69.5	62	25.5	6~M16
3V-15	A11	M30x3.5	6~M20	35	32	66	165	43	51.25	18.25	77.5	69.5	62	25.5	3~M10
3V-15	A15	M30x3.5	6~M20	35	26	66	165	43	51.25	18.25	77.5	69.5	62	25.5	6~M24
3V-18	A8	M30x3.5	6~M20	35	24	66	165	43	51.25	18.25	108	100	62	25.5	6~M16
3V-18	A11	M30x3.5	6~M20	35	32	66	165	43	51.25	18.25	108	100	62	25.5	3~M10
3V-18	A15	M30x3.5	6~M20	35	26	66	165	43	51.25	18.25	108	100	62	25.5	6~M24
3V-21	A11	M30x3.5	6~M24	41	35	74	180	60	93.5	24.5	89	81	65	25	6~M20
3V-21	A15	M30x3.5	6~M24	41	35	74	180	60	93.5	24.5	89	81	65	25	3~M12
3V-24	A11	M30x3.5	6~M24	41	35	74	180	60	93.5	24.5	128	120	65	25	6~M20
3V-24	A15	M30x3.5	6~M24	41	35	74	180	60	93.5	24.5	128	120	65	25	3~M12
3V-32	A15	M30x3.5	6~M24	41	35	74	180	60	189.5	24.5	128	120	65	25	3~M12

紅色數據為 3V-A 型之寸法 (The dimensions and the specifications of 3V-A type are in red data.)

立車用中實動力夾頭 (二)
POWER CHUCK FOR VERTICAL LATHE

三爪中實防水防屑型

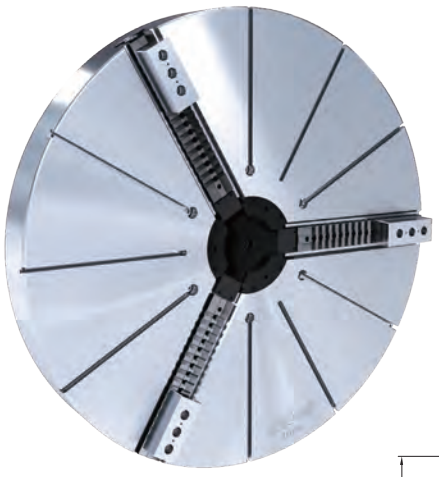

- 楔形三爪中實夾頭。
- 主爪可單獨手動調整行程，以利工件求心。
- 防切屑及防水設計，特別適合使用於立式車床。
- WEDGE-HOOK type 3-jaw high speed power chuck.
- With manual radial setting of master jaws for the workpiece centering.
- Sealed against swarf, chips and coolant, suitable for vertical lathe.

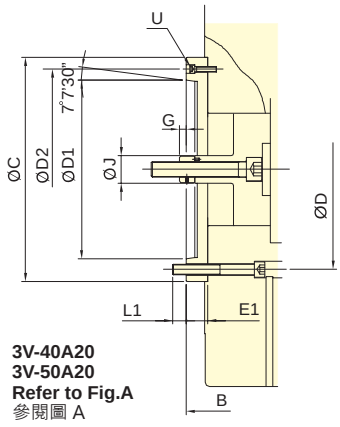

3V-40A20
3V-50A20
Refer to Fig.A
參閱圖 A

Fig.A
圖 A

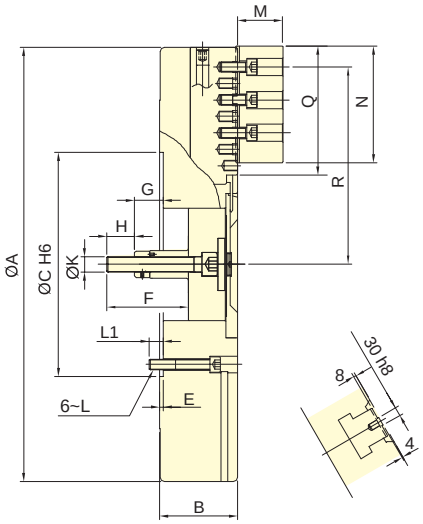

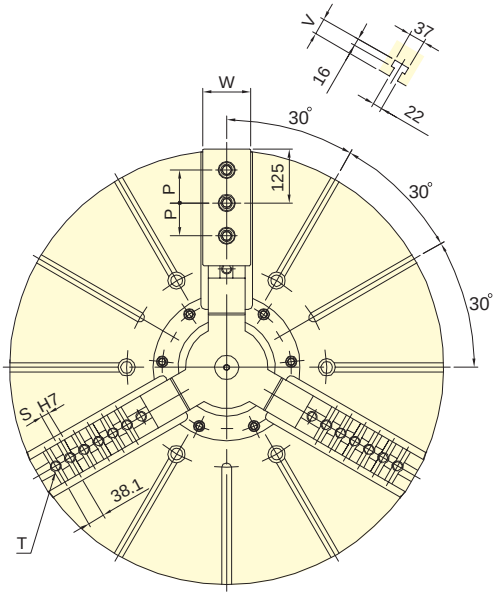

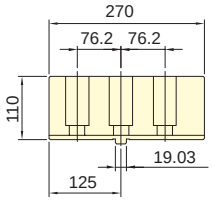

生爪 Soft jaw SJ-50 for V-40"~50" SJ-63 for V-63"~79"

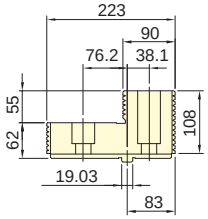

硬爪 Hardened jaw HJ-50 for V-40"~79"

保留規格修改的權利
Subject to technical changes

技術規格 SPECIFICATIONS

型號 Model		楔心行程 Plunger stroke mm	爪行程 (直徑) Jaw stroke (Dia.) mm	夾持直徑 Chucking Dia. 最大 Max. mm	最小 Min. mm	容許最大入力 Max. D.B. pull kN (kgf)	最大夾持力 Max. Clamping force kN (kgf)	最高迴轉數 Max. speed min-1 (r.p.m.)	I Moment of inertia kg・m²		重量 Weight kg		適用迴轉缸 Matching cyl.	最大使用壓力 Max. pressure MPa (kgf/cm²)
3V-40	A20	57	46+(60)	1005	310	180(18350)	320(32620)	630	68	72	780	849	RK-250 RE-250 RE-A250 RE-L250	4.2(42)
3V-50	A20	57	46+(60)	1250	290	180(18350)	320(32620)	500	145	148	1000	1050		4.2(42)
3V-63		60	48+(80)	1600	390	200(20390)	360(36700)	400	500	-	1900	-		4.6(46)
3V-79		60	48+(80)	2000	440	200(20390)	360(36700)	320	1250	-	2800	-		4.6(46)

外型尺寸 DIMENSIONS

Model		A	B		C	D	D1	D2	E	E1	F	G max.		G min.		H	J	K
3V-40	A20	1005	184	226	520	463.6	412.78	463.6	8	50	190	123	73	66	16	65	65	M36x4
3V-50	A20	1250	184	226	520	463.6	412.78	463.6	8	50	190	123	73	66	16	65	65	M36x4
3V-63		1600	222	-	720	647.6	-	-	8	-	218	131	-	71	-	65	-	M36x4
3V-79		2000	240	-	720	647.6	-	-	8	-	238	133	-	73	-	65	-	M36x4

Model		L	L1	M	N	P	Q	R max.	R min.	S	T	U	V	W
3V-40	A20	M24	37	110	270	76.2	295	457	404	6~19.03	7~M24	3~M12	42	84
3V-50	A20	M24	37	110	270	76.2	416	563	510	9~19.03	9~M24	3~M12	42	84
3V-63		M30	46	110	270	76.2	540	738	674	12~19.03	13~M24	-	42	110
3V-79		M30	48	110	270	76.2	740	914	850	16~19.03	17~M24	-	42	110

紅色數據為 3V-A 型之寸法 (The dimensions and the specifications of 3V-A type are in red data.)

4V-A 立車用中實動力夾頭 (一)
POWER CHUCK FOR VERTICAL LATHE

四爪中實防水防屑型

- 楔形四爪中實夾頭。
- 防切屑及防水設計，特別適合使用於立式車床。
- WEDGE-HOOK type 4-jaw high speed power chuck.
- Sealed against swarf, chips and coolant, suitable for vertical lathe.

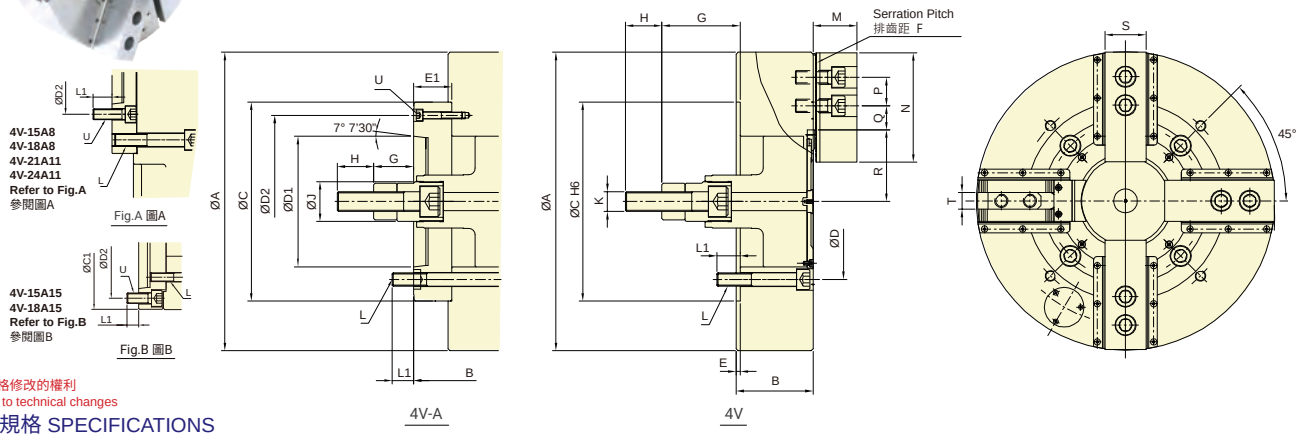

保留規格修改的權利
Subject to technical changes

技術規格 SPECIFICATIONS

型號 Model		楔心行程 Plunger stroke mm	爪行程 (直徑) Jaw stroke (Dia.) mm	夾持直徑 Chucking Dia. 最大 Max. mm	夾持直徑 Chucking Dia. 最小 Min. mm	容許最大入力 Max. D.B. pull kN (kgf)	最大夾持力 Max. Clamping force kN (kgf)	最高迴轉數 Max. speed min⁻¹ (r.p.m.)	I Moment of inertia kg・m²		重量 Weight kg		適用迴轉缸 Matching cyl.	最大使用壓力 Max. pressure MPa (kgf/cm²)
4V-12	A8	30	12.7	304	48	41(4180)	156(15900)	2520	0.72	0.79	59	67	RK-150 RE-150	2.6(26)
4V-15	A8	35	16	381	36	81.9(8360)	245.1(25000)	2300	2.10	2.39	108	131	RK-200 RE-200K	2.8(28) 3.0(30)
4V-15	A11	35	16	381	36	81.9(8360)	245.1(25000)	2300	2.10	2.39	108	130		
4V-15	A15	35	16	381	36	81.9(8360)	245.1(25000)	2300	2.10	2.79	108	139		
4V-18	A8	35	16	450	60	81.9(8360)	245.1(25000)	2050	3.51	3.80	139.3	162		
4V-18	A11	35	16	450	60	81.9(8360)	245.1(25000)	2050	3.51	3.80	139.3	160.9		
4V-18	A15	35	16	450	60	81.9(8360)	245.1(25000)	2050	3.51	4.20	139.3	172		
4V-21	A11	35	16	530	62	81.9(8360)	271.6(27700)	1450	6.98	7.62	199	230		
4V-21	A15	35	16	530	62	81.9(8360)	271.6(27700)	1450	6.98	7.53	199	223.7		
4V-24	A11	35	16	610	152	81.9(8360)	271.6(27700)	1350	11.34	11.98	243.8	275		
4V-24	A15	35	16	610	152	81.9(8360)	271.6(27700)	1350	11.34	11.88	243.8	268.3		
4V-32	A15	35	16	800	152	81.9(8360)	271.6(27700)	880	32.58	33.13	396	419.9		

外型尺寸 DIMENSIONS

Model		A	B		C	C1	D	D1	D2	E	E1	F	G max.		G min.		H	J
4V-12	A8	304	107	141	220	-	171.4	139.72	190	6	40	1.5	113	73	83	43	36	50
4V-15	A8	381	116	164	300	-	235	139.72	171.4	6	54	1.5	153	99	118	64	55	60
4V-15	A11	381	116	168	300	-	235	196.87	260	6	58	1.5	153	95	118	60	55	60
4V-15	A15	381	116	172	-	380	235	285.78	330.2	6	62	1.5	153	91	118	56	55	60
4V-18	A8	450	116	164	300	-	235	139.72	171.4	6	54	1.5	153	99	118	64	55	60
4V-18	A11	450	116	168	300	-	235	196.87	260	6	58	1.5	153	95	118	60	55	60
4V-18	A15	450	116	172	-	380	235	285.78	330.2	6	62	1.5	153	91	118	56	55	60
4V-21	A11	530	127	167	380	-	330.2	196.87	235	6	46	3	137	91	102	56	55	60
4V-21	A15	530	127	167	380	-	330.2	285.78	330.2	6	46	3	137	91	102	56	55	60
4V-24	A11	610	127	167	380	-	330.2	196.87	235	6	46	3	137	91	102	56	55	60
4V-24	A15	610	127	167	380	-	330.2	285.78	330.2	6	46	3	137	91	102	56	55	60
4V-32	A15	800	147	187	380	-	330.2	285.78	330.2	6	46	3	137	91	102	56	55	60

Model		K	L	L1		M	N	P	Q max.	Q min.	R max.	R min.	S	T	U
4V-12	A8	M20x2.5	3~M16	24	24	42	110	30	51.75	15.75	61.3	54.9	40	16	4~M8
4V-15	A8	M30x3.5	6~M20	35	24	66	165	43	40.75	18.25	87.5	79.4	62	25.5	6~M16
4V-15	A11	M30x3.5	6~M20	35	32	66	165	43	40.75	18.25	87.5	79.4	62	25.5	4~M10
4V-15	A15	M30x3.5	6~M20	35	26	66	165	43	40.75	18.25	87.5	79.4	62	25.5	6~M24
4V-18	A8	M30x3.5	6~M20	35	24	66	165	43	51.22	18.22	108	100	62	25.5	6~M16
4V-18	A11	M30x3.5	6~M20	35	32	66	165	43	51.22	18.22	108	100	62	25.5	4~M10
4V-18	A15	M30x3.5	6~M20	35	26	66	165	43	51.22	18.22	108	100	62	25.5	6~M24
4V-21	A11	M30x3.5	6~M24	41	35	74	180	60	72.5	24.5	89	81	65	25	6~M20
4V-21	A15	M30x3.5	6~M24	41	35	74	180	60	72.5	24.5	89	81	65	25	3~M12
4V-24	A11	M30x3.5	6~M24	41	35	74	180	60	93.5	24.5	128	120	65	25	6~M20
4V-24	A15	M30x3.5	6~M24	41	35	74	180	60	93.5	24.5	128	120	65	25	3~M12
4V-32	A15	M30x3.5	6~M24	36	35	74	180	60	189.5	24.5	128	120	65	25	3~M12

紅色數據為 4V-A 型之寸法 (The dimensions and the specifications of 4V-A type are in red data.)

立車用中實動力夾頭 (二)
POWER CHUCK FOR VERTICAL LATHE

- 楔形四爪中實夾頭。
- 主爪可單獨手動調整行程，以利工件求心。
- 防切屑及防水設計，特別適合使用於立式車床。
- WEDGE-HOOK type 4-jaw high speed power chuck.
- With manual radial setting of master jaws for the workpiece centering.
- Sealed against swarf, chips and coolant, suitable for vertical lathe.

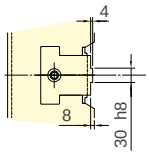

4V-40 A20
4V-50 A20
4V-63 A20
Refer to Fig.A
參閱圖A

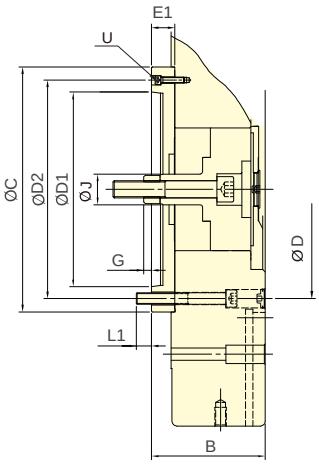

Fig.A
圖A

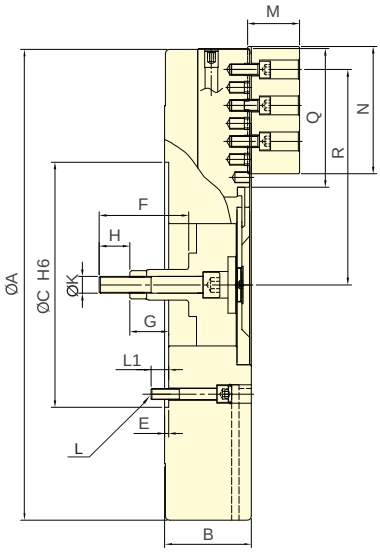

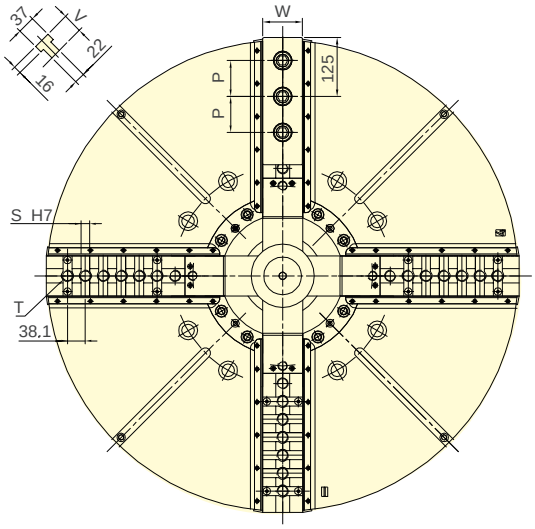

技術規格 SPECIFICATIONS

型號 Model		楔心行程 Plunger stroke mm	爪行程 (直徑) Jaw stroke (Dia.) mm	夾持直徑 Chucking Dia. 最大 Max. mm	夾持直徑 Chucking Dia. 最小 Min. mm	容許最大入力 Max. D.B. pull kN (kgf)	最大夾持力 Max. Clamping force kN (kgf)	最高迴轉數 Max. speed min-1 (r.p.m.)	I Moment of inertia kg・m²		重量 Weight kg		適用迴轉缸 Matching cyl.	最大使用壓力 Max. pressure MPa (kgf/cm²)
4V-40	A20	57	46+(60)	1000	310	180(18350)	320(32620)	500	70	94	740	790	RK-250 RE-250 RE-A250 RE-L250	4.2(42)
4V-50	A20	57	46+(60)	1250	290	180(18350)	320(32620)	450	222	224	1130	1180		4.2(42)
4V-63		60	48+(80)	1600	390	200(20390)	360(36700)	340	565		2000			4.6(46)

外型尺寸 DIMENSIONS

Model		A	B		C	D	D1	D2	E	E1	F	G max.		G min.		H	J	K
4V-40	A20	1000	184	226	520	463.6	412.78	463.6	8	50	190	123	73	66	16	65	65	M36x4
4V-50	A20	1250	200	242	520	463.6	412.78	463.6	8	50	190	123	73	66	16	65	65	M36x4
4V-63		1600	240	-	720	647.6	-	-	8	-	214	131		71		65	-	M36x4

Model		L	L1	M	N	P	Q	R max.	R min.	S	T	U	V	W
4V-40	A20	M24	37	110	270	76.2	295	457	404	6~19.03	7~M24	3~M12	42	84
4V-50	A20	M24	38	110	270	76.2	416	563	510	9~19.03	9~M24	3~M12	42	84
4V-63		M30	46	110	270	76.2	540	738	674	12~19.03	13~M24	-	42	110

紅色數據為 4V-A 型之寸法 (The dimensions and the specifications of 4V-A type are in red data.)

3HS 三爪中空低保養動力夾頭
THRU-HOLE FULLY SEALED TYPE POWER CHUCK

全密封型

- 全密閉式設計，大幅降低保養頻率，提高生產效率。
- 夾頭內部可長時間潤滑，能防止切削水、切屑或異物的滲入，確保夾持精度與耐用度。
- 推薦適合無人化作業場合、鑄件和鍛件的乾式加工、高壓冷卻液下加工使用。特別適合使用於立式車床。
- 可依自動化生產需求訂製中心注水或注氣(選配)。

- Fully sealed design extends maintenance intervals, improving production efficiency.
- Sealed design ensures constant lubrication and protects against the ingress of coolant and chips, which guarantees clamping precision and durability.
- Suitable for lights-out manufacturing; dry machining of castings and forgings; or when high-pressure coolant is utilized. Especially ideal for vertical lathes.
- Media fed through central bore - available for coolant or air. (optional)

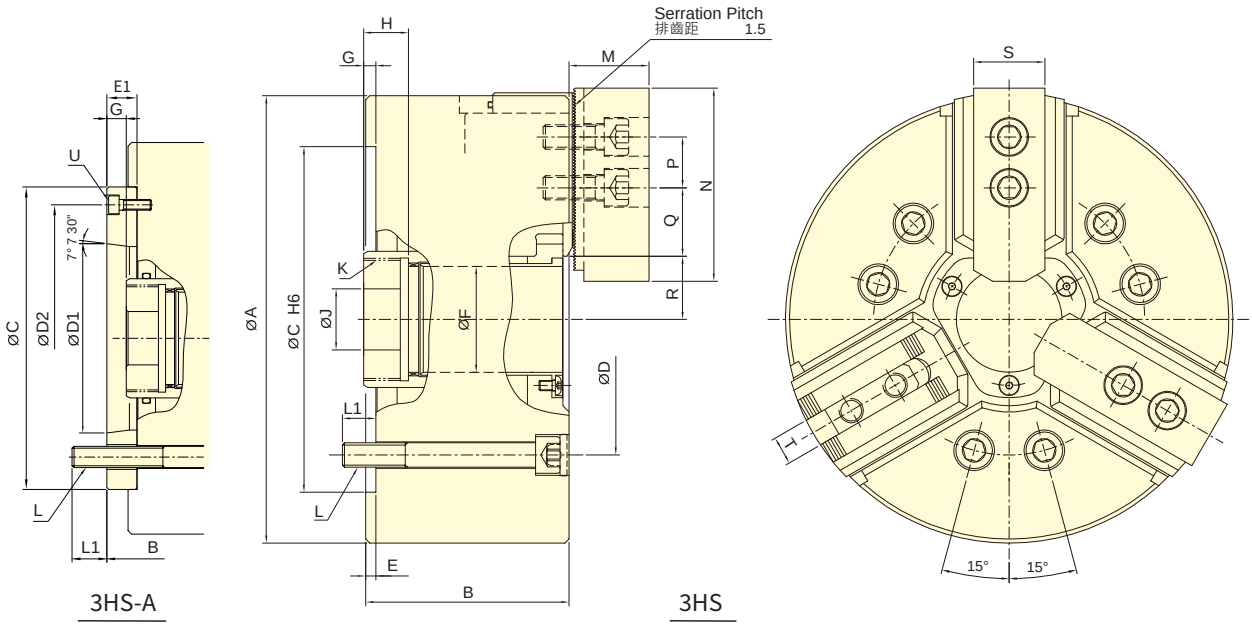

保留規格修改的權利 Subject to technical changes

技術規格 SPECIFICATIONS

型號		楔心行程	爪行程 (直徑)	夾持直徑 Chucking Dia.		容許最大入力	最大夾持力	最高迴轉數	I	重量		適用迴轉缸	最大使用壓力
Model		Plunger stroke	Jaw stroke (Dia.)	最大 Max.	最小 Min.	Max. D.B. pull	Max. Clamping force	Max. speed	Moment of inertia	Weight		Matching cyl.	Max. pressure
		mm	mm	mm	mm	kN (kgf)	kN (kgf)	min^{-1} (r.p.m.)	kg • m^2	kg			MPa (kgf/cm^2)
3HS-08	A6	18	7.6	220	22	31.9(3250)	92(9380)	5000	0.18	26.5	28.1	TK-A853	2.6(26)

外型尺寸 DIMENSIONS

Model		A	B		C	D	D1	D2	E	E1	F	G max.		G min.		H	J
3HS-08	A6	220	98	110	170	133.4	106.38	150	5	17	52	20	15	2	-3	20	30

Model		K max.	K Default	L	L1		M	N	P	Q max.	Q min.	R max.	R min.	S	T	U
3HS-08	A6	M60x2	M55x2	6~M12	19	17	39	95	25	47.75	29.75	29	25.2	35	14	3~M6

紅色數據為 3HS-A 型之寸法 (The dimensions and the specifications of 3HS-A type are in red data.)

三爪中實低保養動力夾頭
FULLY SEALED TYPE POWER CHUCK

- 全密閉式設計，減少保養頻率，提高生產效率。
- 夾頭內部可長時間潤滑，能防止切削水，切屑或異物的滲入，確保夾持精度與耐用度。
- 推薦適合無人化作業場合、鑄件和鍛件的乾式加工、高壓冷卻液下加工使用。特別適合使用於立式車床。
- 可依自動化生產需求訂製中心注水或注氣(選配)。
- Fully sealed design extends maintenance intervals, improving production efficiency.
- Sealed design ensures constant lubrication and protects against the ingress of coolant and chips, which guarantees clamping precision and durability.
- Suitable for lights-out manufacturing; dry machining of castings and forgings; or when high-pressure coolant is utilized. Especially ideal for vertical lathes.
- Media fed through central bore - available for coolant or air. (optional)

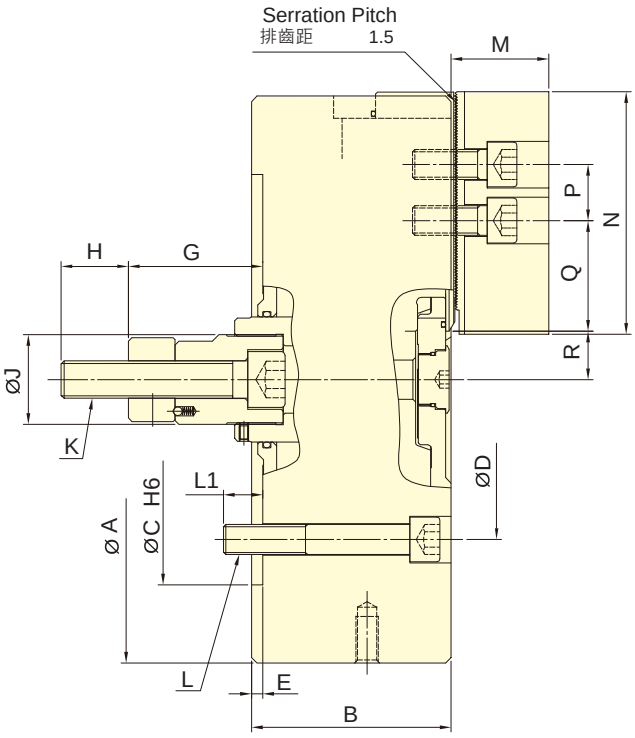

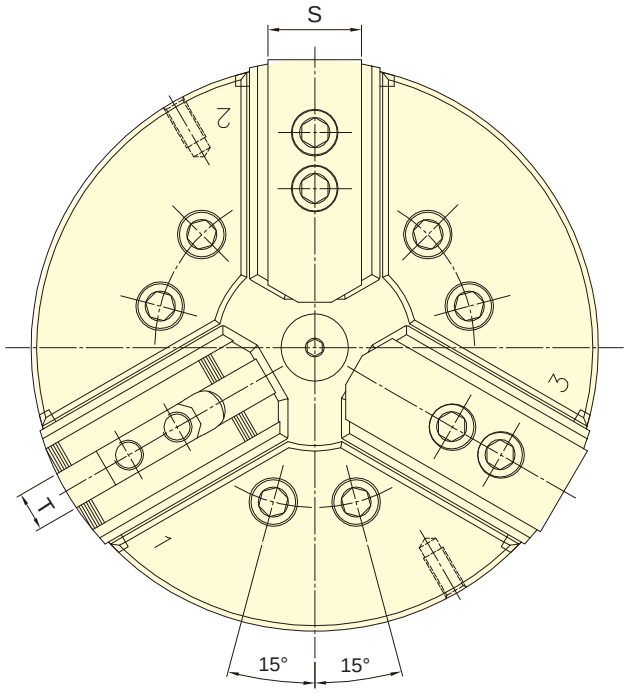

保留規格修改的權利
Subject to technical changes

技術規格 SPECIFICATIONS

型號	楔心行程	爪行程(直徑)	夾持直徑 Chucking Dia.		容許最大入力	最大夾持力	最高迴轉數	I	重量	適用迴轉缸	最大使用壓力
	Plunger stroke	Jaw stroke (Dia.)	最大Max.	最小Min.	Max. D.B. pull	Max. clamping force	Max. speed	Moment of inertia	Weight	Matching cyl.	Max. pressure
Model	mm	mm	mm	mm	kN(kgf)	kN (kgf)	min^{-1}(r.p.m.)	kg・m^2	kg		MPa (kgf/cm^2)
3PS-12	30	12.7	315	22	38.5(3926)	160(16315)	3360	0.84	67	RK-150(N) RA-270	2.4 (24.4) 0.7 (7.4)

外型尺寸 DIMENSIONS

Model	A	B	C	D	E	G max.	G min.	H	J	K
3PS-12	315	106	220	171.4	6	102	72	39	48	M20x2.5

Model	L	L1	M	N	P	Q max.	Q min.	R max.	R min.	S	T
3PS-12	6~M16	22	52	130	30	87.25	46.75	27	20.65	50	21

斜爪式中實三爪夾頭
INCLINED MASTER JAWS POWER CHUCK

- 中心防塵蓋端面經研磨處理，可做為工件或治具的基準靠模面。
- 內斜式主爪滑道(具有軸向行程的後拉效果)，改善工具夾持上浮情況，並可使用標準生爪。
- The surface of the center through cover is grinding treated, it can be the position base surface of the jig/workpiece.
- The slideway of main jaws is inclined. It improves the clamping force and reduces the upfloat situation of the workpiece.
- Work with standard top jaws.

- 氣密檢知 (選配)。
- 只能用於工件外夾。
- Airtight pressure detect function is optional.
- External gripping only.

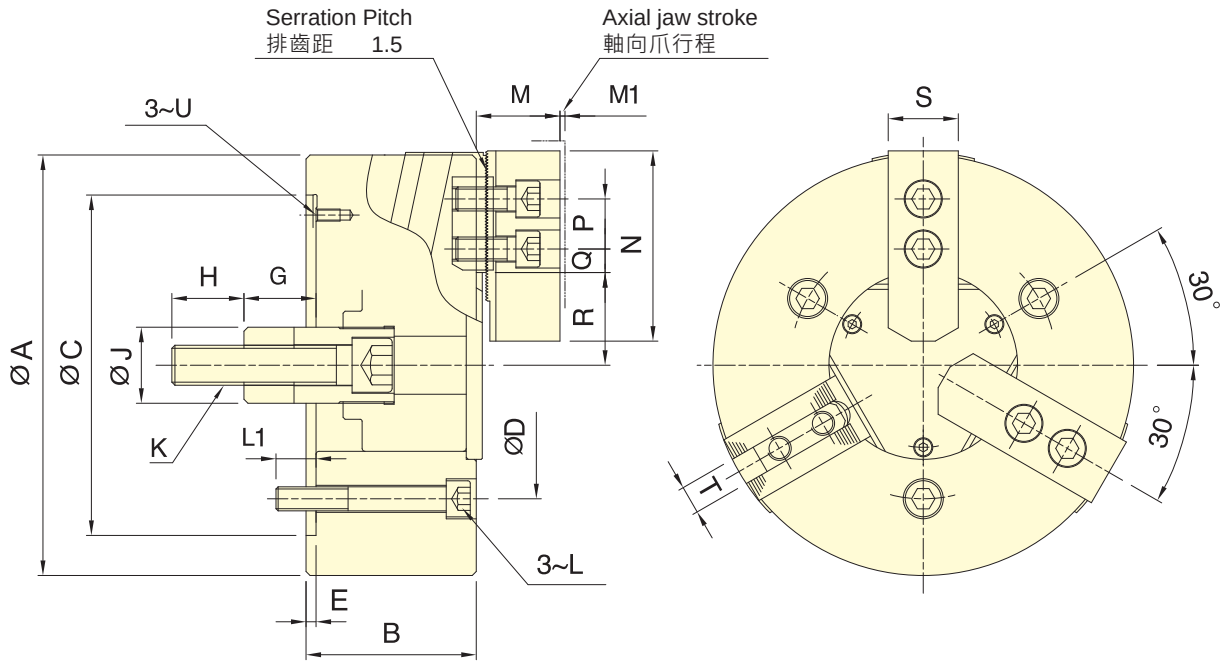

保留規格修改的權利
Subject to technical changes

技術規格 SPECIFICATIONS

型號	楔心行程	爪行程 (直徑)	夾持直徑 Chucking Dia.		容許最大入力	最大夾持力	最高迴轉數	I	重量	適用迴轉缸	最大使用壓力
Model	Plunger stroke	Jaw stroke (Dia.)	最大 Max.	最小Min.	Max. D.B. pull	Max. Clamping force	Max. speed	Moment of inertia	Weight	Matching cyl.	Max. pressure
	mm	mm	mm	mm	kN (kgf)	kN (kgf)	min^{-1} (r.p.m.)	kg・m^2	kg		MPa (kgf/cm^2)
3N-06	20	8.1 (軸向 0.9)	165	14	18 (1835)	61.5 (6270)	5000	0.05	11.1	RK-100(N)	2.6 (26)
3N-08	23	9.4 (軸向 1.0)	210	17	25 (2540)	85.8 (8750)	4500	0.14	24.5	RK-125(N)	2.2 (22)
3N-10	25	10.2 (軸向 1.1)	254	22	29 (2950)	108 (11000)	4000	0.32	34.5	RK-150(N)	1.8 (18)

外型尺寸 DIMENSIONS

Model	A	B	C(H6)	D	E	G max.	G min.	H	J	K	L
3N-06	165	72	140	104.8	5	54.5	34.5	36	34	M16x2	M10
3N-08	210	85	170	133.4	5	59	36	36	38	M20x2.5	M12
3N-10	254	89	220	171.4	5	63	38	36	45	M20x2.5	M16

Model	L1	M	M1	N	P	Q max.	Q min.	R max.	R min.	S	T	U
3N-06	16	41	0.9	73	20	15.25	7.75	38.3	34.25	31	12	M6
3N-08	20	42	1.0	95	25	22.25	11.75	46.3	41.6	35	14	M6
3N-10	24	47	1.1	110	30	33.75	11.25	52.1	47	40	16	M8

後拉式動力夾頭
PULL DOWN POWER CHUCK

- 可同時將工件做徑向夾持與軸向後拉，使工件不上浮並緊貼座金基準面。
- 高剛性硬化處理的本體與圓柱後拉機構，並經過軸孔精搪，確保夾持精度與耐用度。
- Radial clamp and axial pull down at the same time, keep the workpiece attaching close to the base surface of the chuck.
- Almost no workpiece uplifting displacement.
- The body and the cylinder pull-down mechanism are heat-treated and fine boring, which guarantee the clamping precision and durableness.

- 氣密檢知 (選配)。
- Airtight pressure detect function is optional.

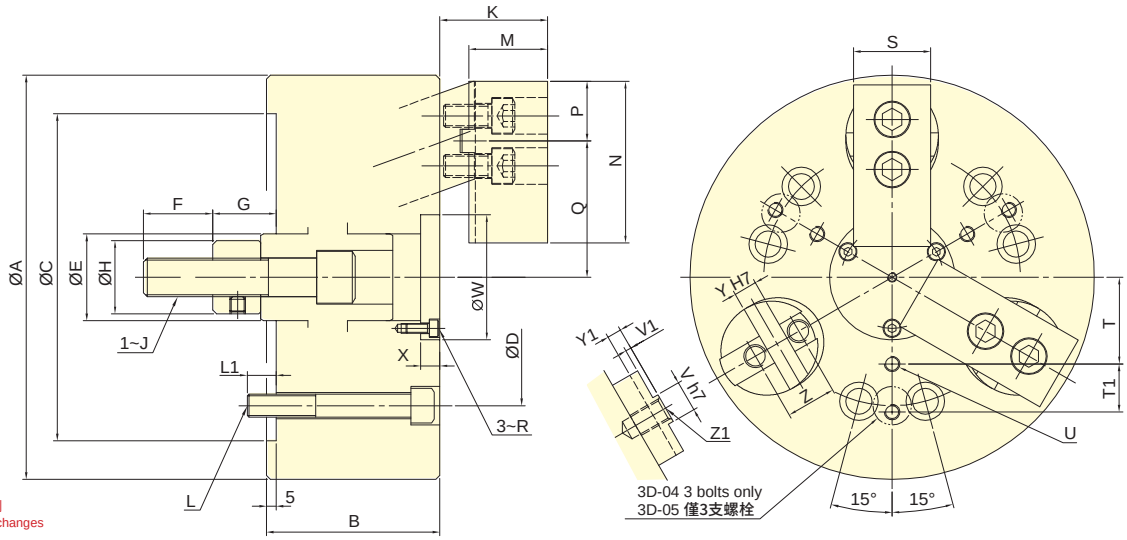

保留規格修改的權利
Subject to technical changes

技術規格 SPECIFICATIONS

型號 Model	楔心行程 Plunger stroke (mm)	爪行程 (直徑) Jaw stroke (Dia.) (mm)	夾持直徑 Chucking Dia. 最大 Max. (mm)	夾持直徑 Chucking Dia. 最小 Min. (mm)	容許最大入力 Max. D.B. pull kN (kgf)	最大夾持力 Max. Clamping force kN (kgf)	最高迴轉數 Max. speed min^{-1} (r.p.m.)	I Moment of inertia kg・m^2	重量 Weight kg	適用迴轉缸 Matching cyl.	最大使用壓力 Max. pressure MPa (kgf/cm^2)
3D-04	7	5	110	13	6.0(612)	10.5(1070)	3500	0.007	4.5	RK-75	1.6(16.5)
3D-05	7	5	135	21	10.0(1020)	17.0(1730)	3500	0.018	7.9	RK-75	2.7(27.5)
3D-06	10	7.2	165	22	15.0(1530)	25.0(2550)	3500	0.051	15	RK-100	2.1(21.4)
3D-08	10	7.2	210	28	25.0(2550)	45.0(4590)	3000	0.15	26	RK-125	2.2(22.5)
3D-10	15	10.8	254	35	35.0(3569)	60.0(6118)	2500	0.37	46	RK-125	3.1(31.6)
3D-12	15	10.8	304	50	45.0(4590)	75.0(7650)	2000	0.79	70	RK-150	2.8(28.5)
3D-15	20	14.5	381	60	53.9(5500)	90.0(9180)	1500	2.25	132	RK-150	3.4(34.2)

外型尺寸 DIMENSIONS

Model	A	B	C (H6)	D	E	F	G max.	G min.	H	J	K max.	K min.	L	L1	M	N	P
3D-04	110	60	85	70.6	25	20	22	15	25	M10	30	23	3~M10	15	19.5	50	22
3D-05	135	70	110	82.6	30	25	24	17	28	M12	35	28	3~M10	16	24.5	56	23
3D-06	165	85	140	104.8	35	36	37	27	32	M16	45	35	6~M10	16	31	70	27
3D-08	210	90	170	133.4	45	36	38	28	38	M20	56	46	6~M12	15	41	84	31
3D-10	254	110	220	171.4	55	46	47	32	50	M24	65	50	6~M16	24	46	100	38
3D-12	304	125	220	171.4	55	50	49.5	34.5	53	M27	70	55	6~M16	22	51	120	42
3D-15	381	140	300	235	70	55	61	41	55	M30	86	66	6~M20	30	60	165	60

Model	Q max.	Q min.	R	S	T	T 1	U	V (h7)	V 1	W	X	Y(H7)	Y1	Z	Z1
3D-04	37	34.5	M3	25	22.5	-	3~M6	8	2.5	35	2	8	6	-	M10
3D-05	46	43.5	M3	30	27.5	-	3~M6	8	2.5	44	2	8	6	-	M12
3D-06	57.7	54.3	M4	35	35	20	6~M6	10	2.5	52	7	10	6.5	-	M14
3D-08	70.8	67.2	M5	40	45	25	6~M8	16	3	65	10	12	7.5	26	M12
3D-10	85	79.6	M6	50	55	30	6~M8	18	3	75	12	15	7.5	32	M14
3D-12	101.9	96.5	M6	60	70	35	6~M10	20	3	90	12	17	7.5	36	M16
3D-15	135.6	128.3	M8	70	95	45	6~M12	24	4	120	13	20	6	40	M16

後拉式動力夾頭
PULL DOWN POWER CHUCK

二爪中實型

- 可同時將工件做徑向夾持與軸向後拉，使工件不上浮並緊貼座金基準面。
- 高剛性硬化處理的本體與圓柱後拉機構，並經過軸孔精搪，確保夾持精度與耐用度。
- Radial clamp and axial pull down at the same time, keep the workpiece attaching close to the base surface of the chuck.
- Almost no workpiece uplifting displacement.
- The body and the cylinder pull-down mechanism are heat-treated and fine boring, which guarantee the clamping precision and durableness.

- 氣密檢知 (選配)。
- Airtight pressure detect function is optional.

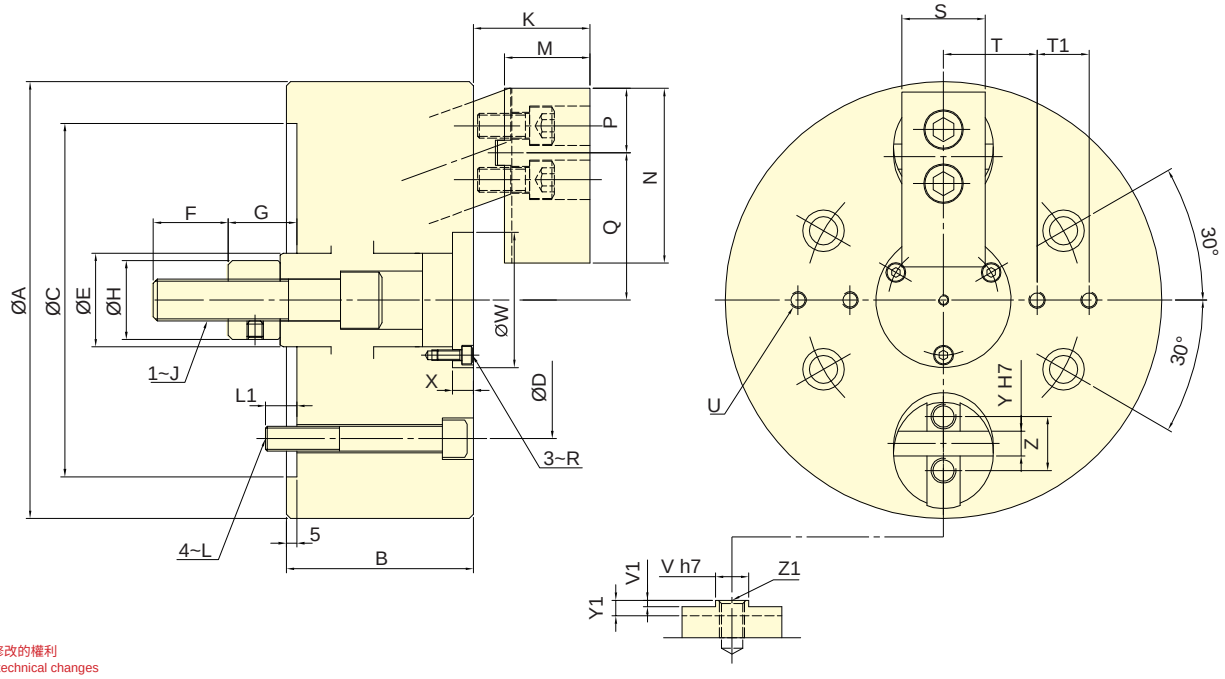

保留規格修改的權利
Subject to technical changes

技術規格 SPECIFICATIONS

型號 Model	楔心行程 Plunger stroke (mm)	爪行程 (直徑) Jaw stroke (Dia.) (mm)	夾持直徑 Chucking Dia. 最大 Max. (mm)	夾持直徑 Chucking Dia. 最小 Min. (mm)	容許最大入力 Max. D.B. pull (kN (kgf))	最大夾持力 Max. Clamping force (kN (kgf))	最高迴轉數 Max. speed (min^{-1} (r.p.m.))	I Moment of inertia (kg・m^2)	重量 Weight (kg)	適用迴轉缸 Matching cyl.	最大使用壓力 Max. pressure (MPa (kgf/cm^2))
2D-06	10	7.2	165	22	10.0(1020)	16.7(1700)	3500	0.045	12	RK-100	1.4(14.3)
2D-08	10	7.2	210	28	16.7(1700)	30.0(3060)	3500	0.13	23	RK-125	1.5(15)
2D-10	15	10.8	254	35	23.3(2379)	40.0(4079)	2500	0.34	43	RK-125	2.1(21.1)

外型尺寸 DIMENSIONS

Model	A	B	C (H6)	D	E	F	G max.	G min.	H	J	K max.	K min.	L	L 1	M	N	P
2D-06	165	85	140	104.8	35	36	37	27	32	M16	45	35	M10	16	31	70	27
2D-08	210	90	170	133.4	45	36	38	28	38	M20	56	46	M12	15	41	84	31
2D-10	254	110	220	171.4	55	46	47	32	50	M24	65	50	M16	24	46	100	38

Model	Q max.	Q min.	R	S	T	T1	U	V (h7)	V 1	W	X	Y (H7)	Y1	Z	Z1
2D-06	57.7	54.3	M4	35	35	20	4~M6	10	2.5	52	7	10	6.5	-	M14
2D-08	70.8	67.2	M5	40	45	25	4~M8	16	3	65	10	12	7.5	26	M12
2D-10	85	79.6	M6	50	55	30	4~M8	18	3	75	12	15	7.5	32	M14

內張後拉式動力夾頭
EXPANSIBLE PULL LOCK POWER CHUCK

- 適用於內徑夾持。
- 可同時將工件做徑向夾持與軸向後拉，使工件不上浮並緊貼座金基準面。
- 高精度安定性，適合最後製程加工。
- Suitable for internal gripping.
- Radial clamp and axial pull down at the same time, keep the workpiece attaching close to the base surface of the chuck.
- Almost no workpiece uplifting displacement.
- With high precision and stability that chuck suitable for end process.

- 氣密檢知 (選配)。
- Airtight pressure detect function is optional.

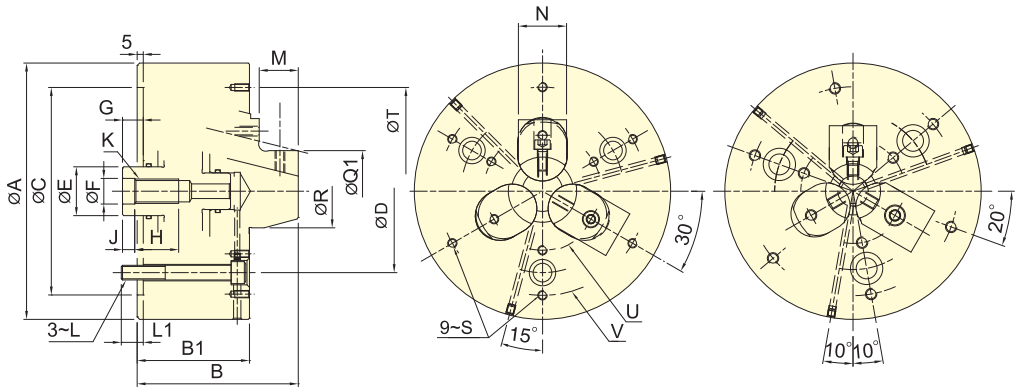

3E-06、08、10

3E-05

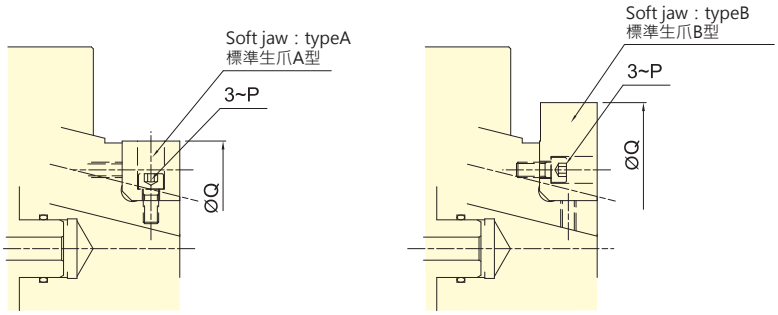

技術規格 SPECIFICATIONS

型號	楔心行程	爪行程 (直徑)	夾持直徑 Chucking Dia.		容許最大入力	最大夾持力	最高迴轉數	I	重量	適用迴轉缸	最大使用壓力
Model	Plunger stroke	Jaw stroke (Dia.)	最大Max.	最小Min.	Max. D.B. pull	Max. Clamping force	Max. speed	Moment of inertia	Weight	Matching cyl.	Max. pressure
	mm	mm	mm	mm	kN (kgf)	kN (kgf)	min^{-1} (r.p.m.)	kg • m^2	kg		MPa (kgf/cm^2)
3E-05	6	3	83	29	13.0(1325)	42.0(4280)	7000	0.018	7.5	RK-100	1.8(18.5)
3E-06	10	5	110	44	18.0(1835)	58.0(5910)	6000	0.042	13.6	RK-100	2.5(25.6)
3E-08	10	5	150	50	25.0(2530)	80.0(8150)	5000	0.14	26.5	RK-125	2.2(22.5)
3E-10	10	5	190	60	35.0(3570)	100.0(10200)	3600	0.31	39.5	RK-150	2.8(28.5)

外型尺寸 DIMENSIONS

Model	A	B	B1	C (H6)	D	E	F (H8)	G max.	G min.	H	J	K	L	L1
3E-05	135	98	72	110	82.6	25	18	18	12	25	8	M16	M10	15
3E-06	165	112	80	140	104.8	35	18	22	12	30	8	M16	M10	16
3E-08	210	135	90	170	133.4	40	21	22	12	36	10	M20	M12	18
3E-10	254	152	102	220	171.4	50	25	25	15	48	10	M24	M16	23

Model	M	N	P	type A		type B		Q1		R	S	T	U (p.c.d)	V (p.c.d)
				Q max.	Q min.	Q max.	Q min.	max.	min.					
3E-05	20	25	M6	68	50	83	67	50	29	25	M6x12	110	55	110
3E-06	23	31	M6	90	70	110	89	70	44	40	M6x12	130	76	134
3E-08	30	35	M8	110	90	150	108	90	50	49	M6x12	170	100	170
3E-10	35	40	M10	127	110	190	125	110	60	59	M8x16	210	120	210

後拉固鎖式動力夾頭
PULL LOCK POWER CHUCK

三爪後拉中空型

- 銷柱後拉型三爪中空夾頭。
- 高夾持力及高精度。
- 特別適合使用於需要重切削的場合。
- Pin-Arbor Draw Down type 3-jaw thru-hole power chuck.
- High radial gripping force and high accuracy.
- Suitable for heavy machining.

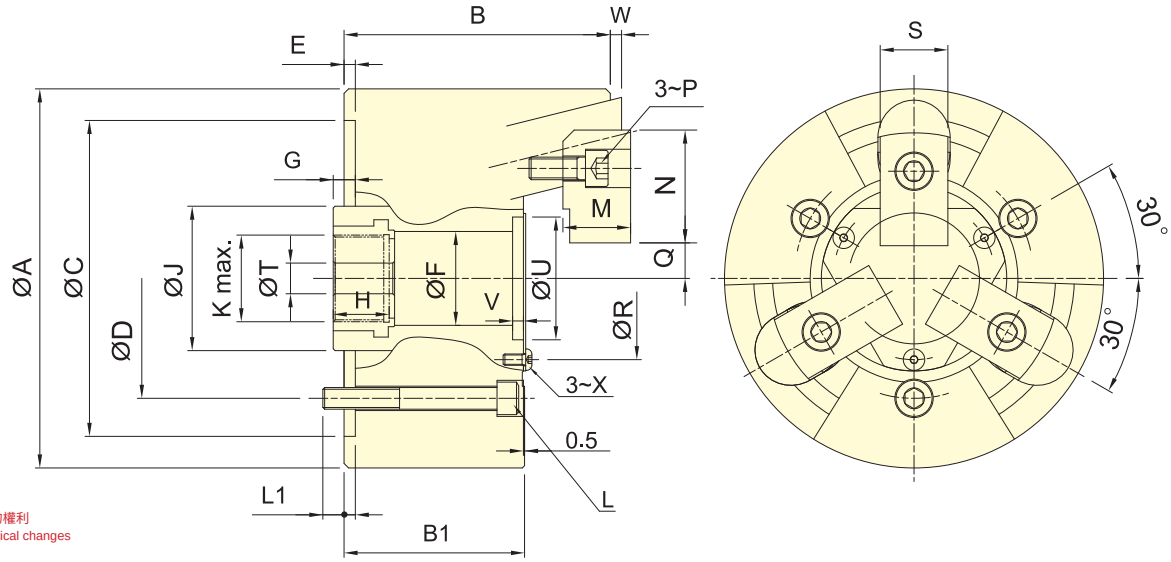

保留規格修改的權利
Subject to technical changes

技術規格 SPECIFICATIONS

型號 Model	楔心行程 Plunger stroke (mm)	爪行程 (直徑) Jaw stroke (Dia.) (mm)	夾持直徑 Chucking Dia. 最大 Max. (mm)	夾持直徑 Chucking Dia. 最小 Min. (mm)	容許最大入力 Max. D.B. pull kN (kgf)	最大夾持力 Max. Clamping force kN (kgf)	最高迴轉數 Max. speed min⁻¹ (r.p.m.)	I Moment of inertia kg・m²	重量 Weight kg	適用迴轉缸 Matching cyl.	最大使用壓力 Max. pressure MPa (kgf/cm²)
3U-203	4	2	42	14	5.8(590)	16.7(1700)	10000	0.001	1.8	RK-75(N)	1.6(16)
3U-204	6	3	60	10	10.0(1020)	28.4(2900)	8000	0.005	3.9	RK-75(N)	2.7(27)
3U-205	6	3	84	15	13.9(1420)	39.7(4050)	8000	0.012	6.8	RK-100(N)	2.0(20)
3U-206	10	5	105	24	17.9(1830)	57.8(5900)	7000	0.055	14.7	RK-100(N)	2.6(26)
3U-208	12	6	132	25	25.0(2550)	80.0(8150)	6000	0.14	25.5	RK-125(N)	2.2(22)
3U-210	10	5	163	34	31.0(3160)	100.0(10100)	4500	0.36	43.5	RK-125(N)	3.1(31)
3U-212	10	5	210	81	35.0(3570)	100.0(10100)	3600	0.68	63.0	RK-125(N)	3.1(31)

外型尺寸 DIMENSIONS

Model	A	B	B1	C(H6)	D	E	F	G max.	G min.	H	J	K	L	L1
3U-203	85	54.5	42	70	54	3.5	25	18	14	22	38	M20x1.5	3~M8	11
3U-204	110	72.5	55	85	70.6	4	30	16	10	24.5	42	M24x1.5	3~M10	12
3U-205	135	84.5	63	110	82.6	4	35	16	10	26	50	M28x1.5	3~M10	15
3U-206	168	118	80	140	104.8	5	45	20	10	31	60	M38x1.5	3~M10	16.5
3U-208	210	137	92	170	133.4	5	52	23	11	31	80	M48x2	3~M12	18
3U-210	254	152	102	220	171.4	5	75	25	15	37	105	M68x2	3~M16	23
3U-212	304	157	102	220	171.4	5	100	25	15	37	135	M92x2	3~M16	26

Model	M	N	P	Q max.	Q min.	R	S	T	U(H6)	V	W max.	W min.	X
3U-203	12	26	M5	7.5	6.5	38	15	10	32	3.5	2	-2	M3
3U-204	17	40	M6	10.75	9.25	46	20	10	38	4	3	-3	M4
3U-205	20	41.5	M8	13.25	11.75	55	24	10	45	5	3	-3	M5
3U-206	30	50	M10	15.75	13.25	72	30	17	58	6	5	-5	M5
3U-208	34	63	M12	16.25	13.25	82	35	17	68	6	5	-7	M6
3U-210	39	74	M14	20.75	18.25	107	40	17	93	6	5	-5	M8
3U-212	44	74	M14	44.25	41.75	130	40	17	114	6	5	-5	M10

後拉固鎖式動力夾頭
PULL LOCK POWER CHUCK

- 銷柱後拉型三爪中實夾頭。
- 高夾持力及高精度。
- 特別適合使用於需要重切削的場合。
- 可配合氣密檢知，進行軸向位置確認，適合長度尺寸精度的要求。
- Pin-Arbor Draw Down type 3-jaw non-thru-hole power chuck.
- High radial gripping force and high accuracy.
- Suitable for heavy machining.
- Can work with the airtight detection device to perform axial position confirm, suitable for the precision of large length size process.

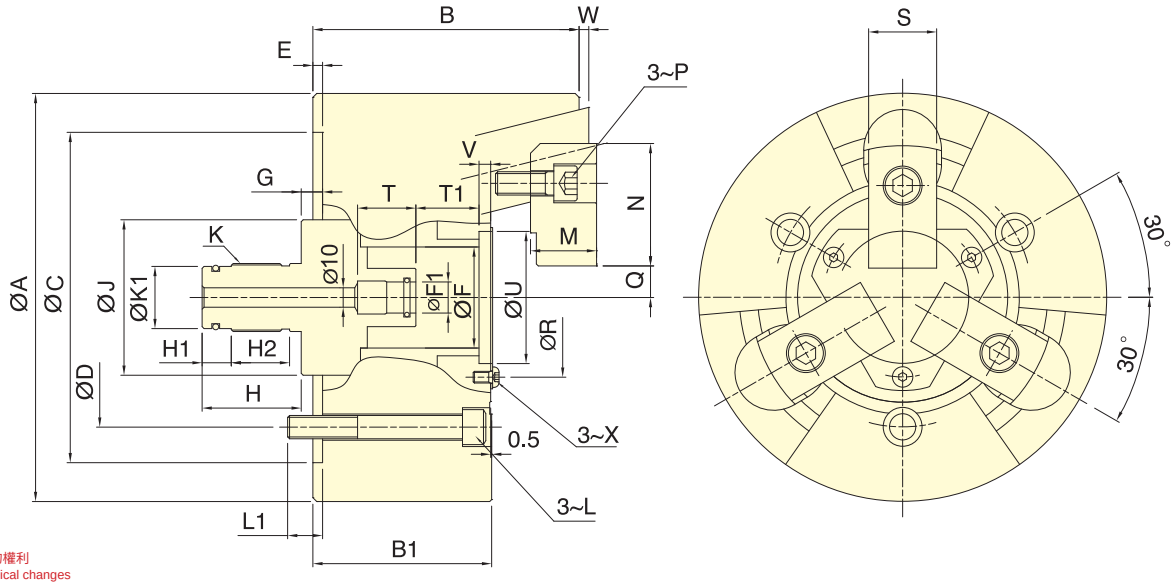

保留規格修改的權利
Subject to technical changes

技術規格 SPECIFICATIONS

型號 Model	楔心行程 Plunger stroke (mm)	爪行程(直徑) Jaw stroke (Dia.) (mm)	夾持直徑 Chucking Dia. 最大 Max. (mm)	夾持直徑 Chucking Dia. 最小 Min. (mm)	容許最大入力 Max. D.B. pull (kN (kgf))	最大夾持力 Max. Clamping force (kN (kgf))	最高迴轉數 Max. speed (min⁻¹ (r.p.m.))	I Moment of inertia (kg・m²)	重量 Weight (kg)	適用迴轉缸 Matching cyl.	最大使用壓力 Max. pressure (MPa (kgf/cm²))
3U-205K	6	3	84	15	13.9(1420)	39.7(4050)	8000	0.018	6.8	RL-100, RL-A100N	2.0(20)
3U-206K	10	5	105	24	17.9(1830)	57.8(5900)	7000	0.055	14.9	RL-100, RL-A100N	2.5(25)
3U-208K	12	6	132	25	25.0(2550)	80.0(8150)	6000	0.14	25.8	RL-125, RL-A125N	2.2(22)
3U-210K	10	5	163	34	31.0(3160)	100(10100)	4500	0.36	44.0	RL-125, RL-A125N	3.1(31)
3U-212K	10	5	210	81	35.0(3570)	100(10100)	3600	0.68	63.8	RL-125, RL-A125N	3.1(31)

外型尺寸 DIMENSIONS

Model	A	B	B1	C(H6)	D	E	F	F1(H8)	G max.	G min.	H	H1	H2	J	K	K1	L
3U-205K	135	84.5	63	110	82.6	4	35	14	16	10	42	12	-	50	M25x1.5	22	M10
3U-206K	168	118	80	140	104.8	5	45	14	20	10	48	12	30	60	M28x1.5	24	M10
3U-208K	210	137	92	170	133.4	5	52	16	23	11	51	15	30	80	M35x1.5	30	M12
3U-210K	254	152	102	220	171.4	5	75	16	25	15	51	15	30	105	M38x1.5	34	M16
3U-212K	304	157	102	220	171.4	5	100	16	25	15	51	15	30	135	M45x1.5	40	M16

Model	L1	M	N	P	Q max.	Q min.	R	S	T	T1	U(H6)	V	W max.	W min.	X
3U-205K	15	20	41.5	M8	13.25	11.75	55	24	25	15.5	45	5	3	-3	M5
3U-206K	16.5	30	50	M10	15.75	13.25	72	30	30	26.5	58	6	5	-5	M5
3U-208K	18	34	63	M12	16.25	13.25	82	35	30	32.5	68	6	5	-7	M6
3U-210K	23	39	74	M14	20.75	18.25	107	40	30	36.5	93	6	5	-5	M8
3U-212K	26	44	74	M14	44.25	41.75	130	40	30	36.5	114	6	5	-5	M10

3W/3W-C 擺動型後拉三爪夾頭
SWING TYPE 3-JAW POWER CHUCK

台灣精品 2020
TAIWAN EXCELLENCE

- 三爪擺動夾持工件。(自動求心型 3W)
- 適合鑄件及鍛件等原材料進行加工。
- 特別適合使用於需要重切削的場合。
- 防塵及防切削液密封圈，使保養工作更加便利。
- 擺動機構零件均以合金鋼加以熱處理硬化及研磨，以提升產品使用壽命。
- 三爪擺動夾持工件。(定心補償型 3W-C)
- 工件偏心補償量2mm，中心頂針定位。

- Swing and grasp the workpiece to three jaw. (3W is automatically positioned to the center type.)
- Suitable for such materials as the casting and forging to process.
- Suitable for heavy machining.
- Seal proof for dust and cutting fluid, it is more convenient when maintenance.
- Swing parts are to heat treatment hardened and ground for steel, in order to improve products service life.
- Swing and grasp the workpiece to three jaw.(3W-C is center compensation type .)
- The workpieces compensation of eccentric is 2 mm, fixed position for the center thimble.

- 可搭配鎢鋼爪，根據工件條件選擇鎢鋼爪型式。(選購品)
- 依不同加工需求，外徑夾持可旋轉為內徑夾持。
- Carbide gripper is optional.
  * The type of the carbide gripper is selected according to the work-piece conditions.
- According to different processing requirements, O.D. Gripping and I.D. Gripping can be interchanged.

鎢鋼爪型式 Type of the Carbide gripper

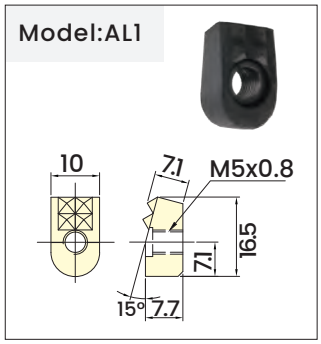

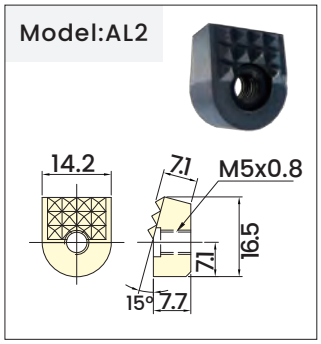

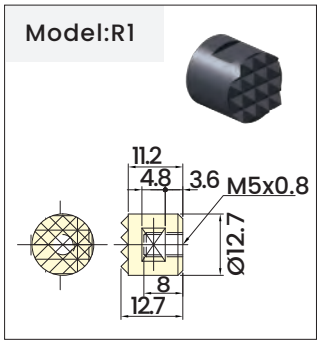

外徑夾持 O.D. Gripping

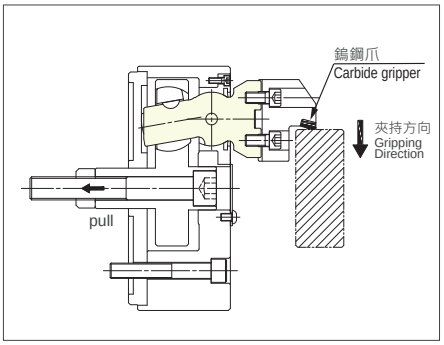

內徑夾持 I.D. Gripping

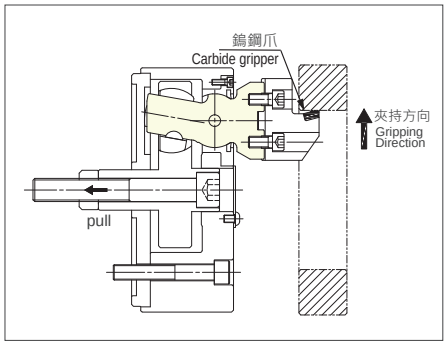

最小夾持範圍 Min. Gripping range

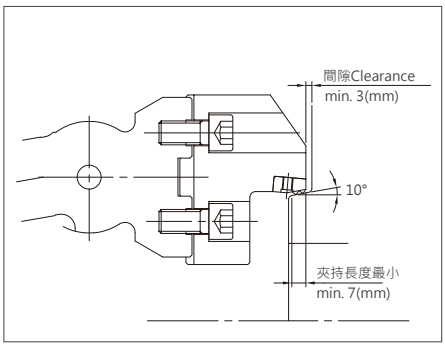

3W/3W-C 擺動型後拉三爪夾頭
SWING TYPE 3-JAW POWER CHUCK

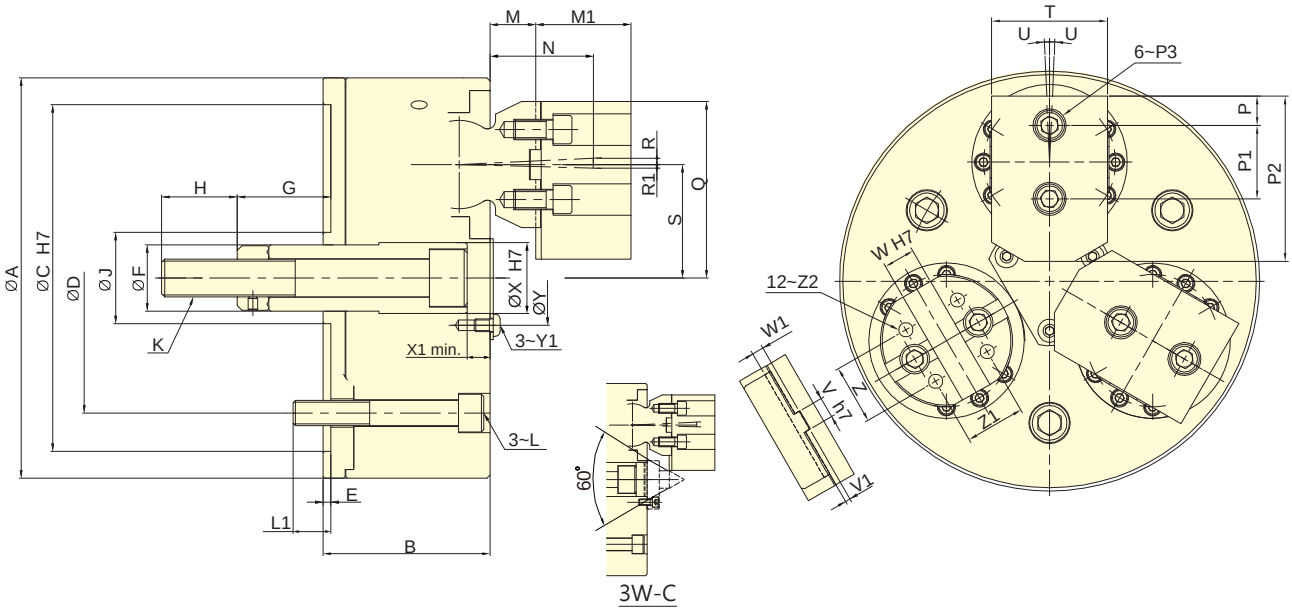

保留規格修改的權利
Subject to technical changes

技術規格 SPECIFICATIONS

型號 Model	楔心行程 Plunger stroke	爪行程 (直徑) Jaw stroke (Dia.)	夾持外徑 Chucking O.D. 最小~最大 Min.~Max.	夾持內徑 Chucking I.D. 最小~最大 Min.~Max.	容許最大入力 Max. D.B. pull	最大夾持力 Max. clamping force	最高迴轉數 Max. speed	I Moment of inertia	重量 Weight	適用迴轉缸 Matching cyl.	補償量 Compensation
	mm	mm	mm	mm	kN (kgf)	kN (kgf)	min^{-1} (r.p.m.)	kg • m^2	kg		mm
3W-08	14.4	9.8	16~150	76~203	25(2550)	85.0(8670)	3700	0.12	23	RK-100(N)	-
3W-C08	14.4	9.8	16~150	76~203	25(2550)	85.0(8670)	3700	0.12	23	RK-100(N)	2
3W-10	17.5	12.5	50~205	85~235	35.3(3600)	105.9(10800)	2500	0.37	48.6	RK-125(N)	-
3W-C10	17.5	12.5	50~205	85~235	35.3(3600)	105.9(10800)	2500	0.37	48.6	RK-125(N)	2
3W-12	17.5	12.5	63~240	127~305	35.3(3600)	105.9(10800)	2400	0.73	65	RK-125(N)	-
3W-C12	17.5	12.5	63~240	127~305	35.3(3600)	105.9(10800)	2400	0.73	65	RK-125(N)	2
3W-15	22.5	15.9	76~317	165~381	56(5600)	168.2(16800)	2000	1.81	97	RK-150(N)	-
3W-C15	22.5	15.9	76~317	165~381	56(5600)	168.2(16800)	2000	1.81	97	RK-150(N)	3

外型尺寸 DIMENSIONS

Model	A	B	C (H7)	D	E	F	G max.	G min.	H	J	K	L	L1	M	M1	N	P	P1	P2
3W-08	210	89	170	133.4	5	34	51.9	37.5	40	50	M18x2.5	M12	19	19.3	56.5	52.7	16	38	80
3W-C08	210	89	170	133.4	5	34	51.9	37.5	40	50	M18x2.5	M12	19	19.3	56.5	52.7	16	38	80
3W-10	254	106	220	171.4	5	42	67.5	50	48	58	M24x3	M16	24	29	60.5	65.6	17.8	44.4	100
3W-C10	254	106	220	171.4	5	42	67.5	50	48	58	M24x3	M16	24	29	60.5	65.6	17.8	44.4	100
3W-12	304	106	220	171.4	5	42	67.5	50	48	58	M24x3	M16	24	29	60.5	65.6	17.8	44.4	100
3W-C12	304	106	220	171.4	5	42	67.5	50	48	58	M24x3	M16	24	29	60.5	65.6	17.8	44.4	100
3W-15	381	120	300	235	5	55	62.5	40	46	80	M27x3	M20	30	32.4	72	74.3	19	63.5	140
3W-C15	381	120	300	235	5	55	62.5	40	46	80	M27x3	M20	30	32.4	72	74.3	19	63.5	140

Model	P3	Q	R	R1	S	T	U	V (h7)	V1	W (H7)	W1	X(H7)	X1	Y	Y1	Z	Z1	Z2
3W-08	M12	95	2.69	2.24	60	57	2	7.94	3	12.68	7	34	3.5	46	M6	32	32	M10
3W-C08	M12	95	2.69	2.24	60	57	2	7.94	3	12.68	7	34	3.5	46	M6	32	32	M10
3W-10	M12	112	4.03	2.26	72	70	2.5	12.7	3	19.03	7	45	5	60	M8	36	36	M10
3W-C10	M12	112	4.03	2.26	72	70	2.5	12.7	3	19.03	7	45	5	60	M8	36	36	M10
3W-12	M12	132.5	4.03	2.26	92.5	70	2.5	12.7	3	19.03	7	45	5	60	M8	36	36	M10
3W-C12	M12	132.5	4.03	2.26	92.5	70	2.5	12.7	3	19.03	7	45	5	60	M8	36	36	M10
3W-15	M12	172	5.14	2.83	121	80	2	12.7	3	19.03	7	56	3	90	M8	36	36	M10
3W-C15	M12	172	5.14	2.83	121	80	2	12.7	3	19.03	7	56	3	90	M8	36	36	M10

軸車削用夾頭
RETRACTABLE-JAW 3-JAW SHAFT CHUCK

- 工件偏心補償量1mm，中心頂針定位，三爪擺動夾持工件。
- 可以在不反轉工件的情況下進行二次加工，因此大幅減少準備時間。
- 通過補償主爪夾緊進行粗、精加工。 內部密封，使維護成本低。
- 搭配雙桿型迴轉缸(3RF-D)。
- 驅動銷推力大小可由迴轉缸壓力控制(3RF-D)。
- The workpiece compensation of eccentric is 1mm, fixed position for the center, swing and grasp the workpiece to three jaw.
- Second machining can be performed without reversing the workpiece, thus significantly reducing setup time.
- With compensating jaws clamping, the Rough and precision machining can be carried out.
- With sealed design, the maintenance costs can be reduced.
- Can be paired with double-rod rotary cylinder (3RF-D type).
- The driver pin thrust can be controlled by the pressure of the rotary cylinder (3RF-D type).

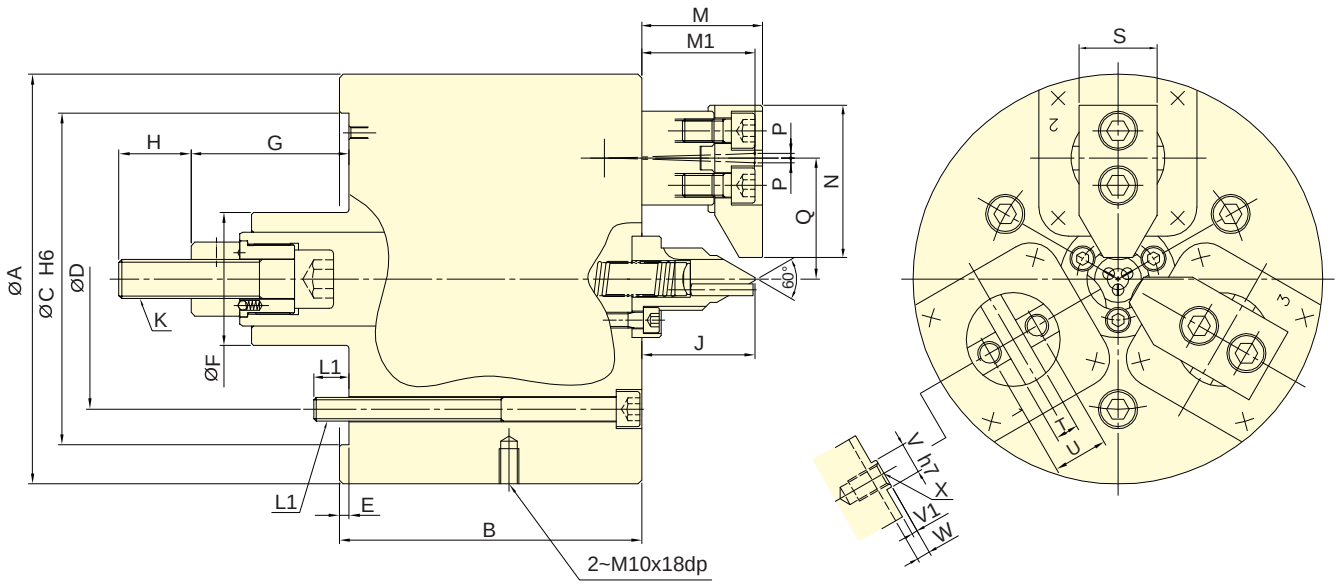

3RF

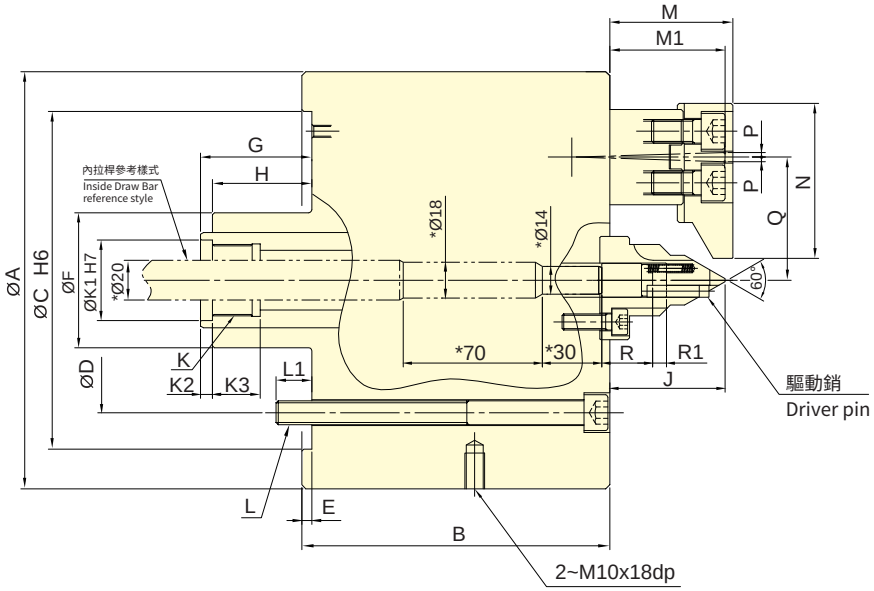

3RF-D

註.標示[*]之寸法為內拉桿製作之尺寸,請勿任意更動。
Note: The dimensions marked [*] are the dimensions of the inside Draw Bar ,
Please don't change it.

軸車削用夾頭
RETRACTABLE-JAW 3-JAW SHAFT CHUCK

技術規格 SPECIFICATIONS

型號 Model	楔心行程 Plunger stroke mm	爪行程 (直徑) Jaw stroke (Dia.) mm	夾持直徑 Chucking Dia. 最大 Max. mm	夾持直徑 Chucking Dia. 最小 Min. mm	容許最大入力 Max. D.B. pull kN (kgf)	最大夾持力 Max. clamping force kN (kgf)	最高迴轉數 Max. speed min^{-1} (r.p.m.)	I Moment of inertia kg・m^2	重量 Weight kg	適用迴轉缸 Matching cyl.	補償量 Compensation mm
3RF-08	43.5	9.4	70	18	39.2 (4000)	39.2 (4000)	4000	0.15	30	RS-1250	1
3RF-08D	43.5	9.4	70	18	39.2 (4000)	39.2 (4000)	4000	0.15	30	RDL-160S	1

外型尺寸 DIMENSIONS

Model	A	B	C (H6)	D	E	F	G max.	G min.	H	J	K	K1 (H7)	K2	K3	L	L1
3RF-08	210	155	170	133.4	5	68	123	79.5	37	58	M20x2.5	-	-	-	3~M12	18
3RF-08D	210	155	170	133.4	5	68	98	54.5	50	58	M36x1.5	40.5	6	24	3~M12	18

Model	M	M1	N	P	Q	R	R1 max.	R1 min.	S	T(H7)	U	V	V1	W	X
3RF-08	62	58	78	2.35	62	-	-	-	40	12	28	16	3	7	M12
3RF-08D	62	58	78	2.35	62	25.5	7	0	40	12	28	16	3	7	M12

應用說明 APPLICATION NOTES

1.加工夾持直徑

補償主爪縮回，工件在中心頂針與尾座頂針間支撐，並透過端面驅動來操作。

1.Clamping diameter machining

The compensating jaws are retracted. The workpiece is clamped between chuck center and tailstock center. Additionally, it is driven by the face driver.

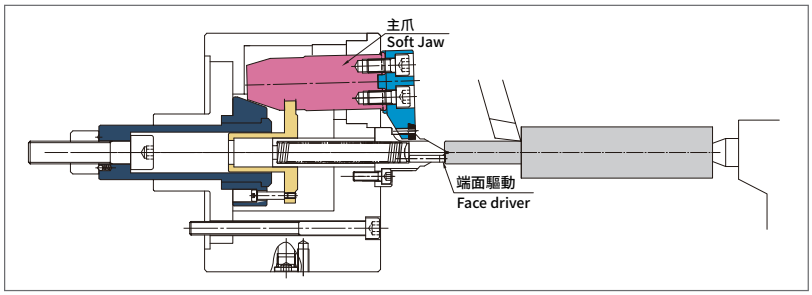

2.粗加工

通過補償主爪夾緊進行粗加工。

2.Rough machining

With compensating jaws clamping, the rough machining can be carried out.

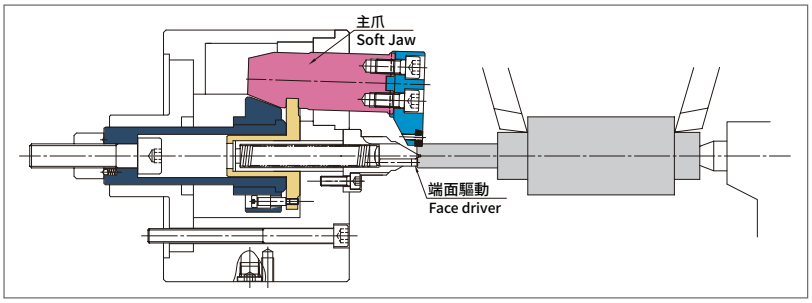

3.精加工

補償主爪縮回，工件在中心頂針與尾座頂針間支撐，並透過端面驅動完成加工，可加工所有的部位，並可達到同心度的要求。

3.Finish machining

Additionally, it is driven by the face driver. The entire workpiece can be machined with precise concentricity.

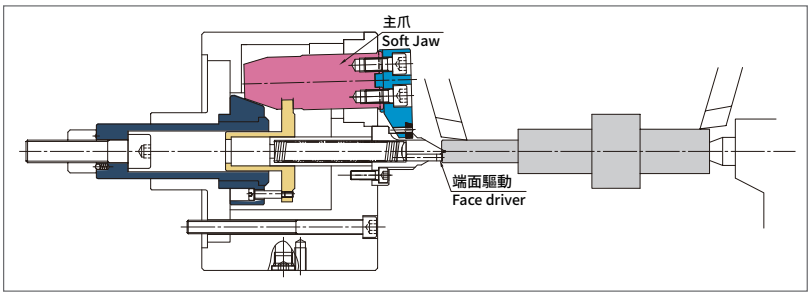

擺動補償型三爪夾頭
SWING COMPENSATING TYPE 3-JAW POWER CHUCK

- 工件偏心補償量2mm，中心頂針定位，三爪擺動夾持工件。
- 特殊防水密封圈，防塵及防切削液，使保養工作更加便利。
- 擺動機構零件均以合金鋼加以熱處理硬化及研磨，以提升產品使用壽命。
- The workpieces compensation of eccentric is 2 mm, fixed position for the center thimble, swing and grasp the workpiece to three jaw.
- Special seal proof for dust and cutting fluid, it is more convenient when maintenance.
- Swing parts are to heat treatment hardened and ground for steel, in order to improve products service life.

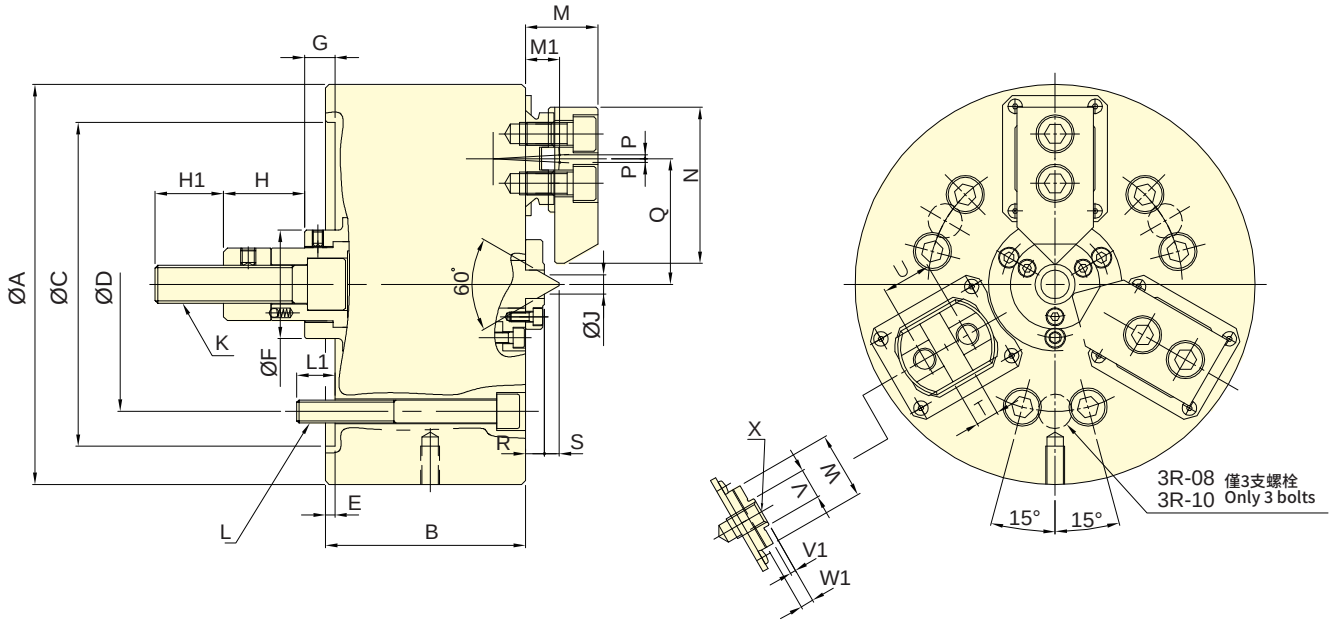

保留規格修改的權利
Subject to technical changes

技術規格 SPECIFICATIONS

型號 Model	楔心行程 Plunger stroke mm	爪行程 (直徑) Jaw stroke (Dia.) mm	夾持直徑 Chucking Dia. 最大 Max. mm	夾持直徑 Chucking Dia. 最小 Min. mm	容許最大入力 Max. D.B. pull kN (kgf)	最大夾持力 Max. clamping force kN (kgf)	最高迴轉數 Max. speed min^{-1} (r.p.m.)	I Moment of inertia kg・m^2	重量 Weight kg	適用迴轉缸 Matching cyl.	補償量 Compensation mm
3R-08	20	8	65	18	19.6(2000)	53.0(5404)	2800	0.15	27	RK-100N	2
3R-10	25	10	90	22	29.4(3000)	67.7(6901)	2500	0.38	45	RK-125N	2
3R-12	25	10.2	110	22	39.4(4000)	88.4(9010)	2000	0.75	72	RK-150N	2

外型尺寸 DIMENSIONS

Model	A	B	C (H6)	D	E	F	G max.	G min.	H	H1	J	K	L	L1
3R-08	210	105	170	133.4	5	57	26	6	42.5	36	10.4	M20x2.5	3~M12	20
3R-10	254	115	220	171.4	5.5	64	36.5	11.5	25	39	15	M20x2.5	3~M16	22.5
3R-12	304	130	220	171.4	5	70	25	0	33	45.5	15	M24x3	3~M16	22

Model	M	M1	N	P	Q max.	Q min.	R	S	T (H7)	U	V	V1	W	W1	X
3R-08	38	18	82	2	68	64	10	7.7	12	26	16	3	35	7	M12
3R-10	40	19	102	2.6	82	78	10	11.3	15	32	18	3	40	7	M14
3R-12	51	24	125	2.5	102.5	97.5	10	11.3	17	36	20	3	50	7	M16

四爪雙動型夾頭
FOUR-JAW TWO MOTION TYPE POWER CHUCK

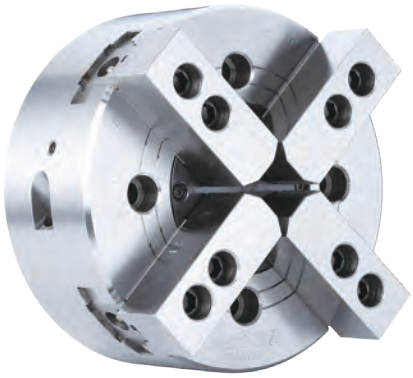

- 曲柄型雙副兩爪各自動作之特殊夾頭。
- 特別適用方形材或其他非規則形狀的工件。
- CRANK type with two pairs of 2 jaws self center independent of each other.
- The 4T series is suitable for square bar and other nonuniform shaped workpieces.

■ 專利產品字號 Patent numbers :
台灣 : PAT.NO.M359385 (Taiwan)
大陸 : PAT.NO.ZL200920009309.1(China)

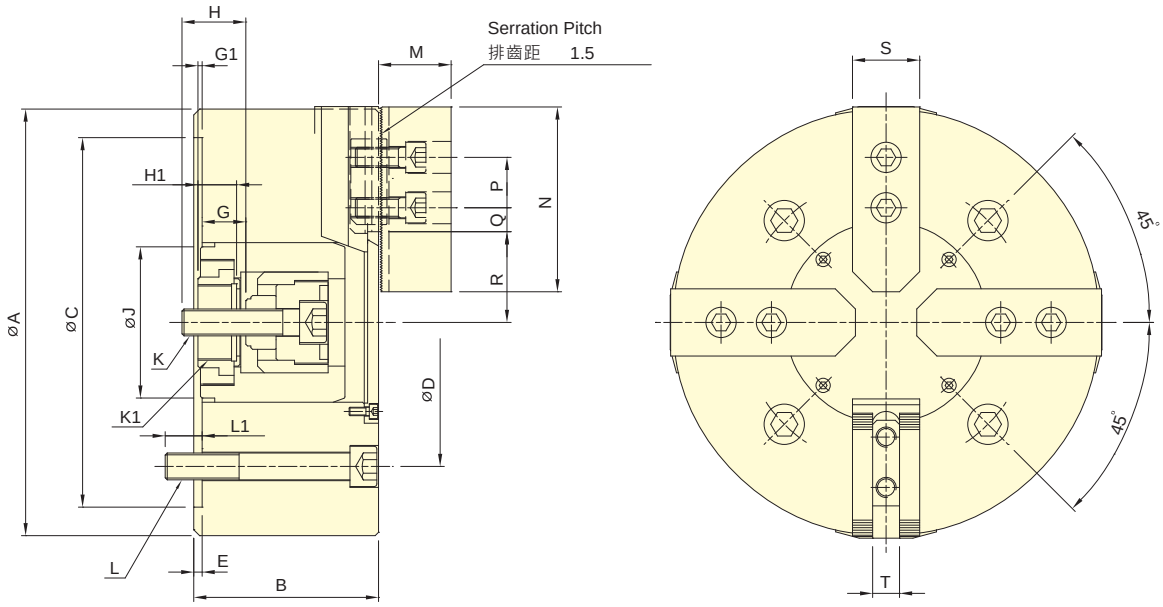

保留規格修改的權利
Subject to technical changes

技術規格 SPECIFICATIONS

型號 Model	楔心行程 Plunger stroke mm	爪行程 (直徑) Jaw stroke (Dia.) mm	夾持範圍 Chucking Range 最大 Max. mm	夾持範圍 Chucking Range 最小 Min. mm	容許最大入力 Max. D.B. pull kN (kgf)	最大夾持力 Max. Clamping force kN (kgf)	最高迴轉數 Max. speed min^{-1} (r.p.m.)	I Moment of inertia kg・m^2	重量 Weight kg	適用迴轉缸 Matching cyl.	最大使用壓力 Max. pressure MPa (kgf/cm^2)
4T-08	17	13.6	210	24	16.0(1630)	54.3(5540)	3000	0.15	23.2	RD-120(N)	1.7(17)
4T-10	20	16	254	50	21.6(2200)	79.4(8100)	2100	0.35	44.3	RD-125(N)	2.2(22)
4T-12	20	16	304	50	21.6(2200)	79.4(8100)	1500	0.66	57.6	RD-125(N)	2.2(22)
4T-15	25	19.6	381	60	27.2(2780)	105.3(10750)	1200	2.25	118.3	RD-125(N)	2.7(27)

外型尺寸 DIMENSIONS

Model	A	B	C(H6)	D	E	G max.	G min.	G1 max.	G1 min.	H	H1	J	K
4T-08	210	91	170	133.4	5	32	15	2.5	-14.5	29	20	61	M14x2
4T-10	254	110	220	171.4	5	36.5	16.5	10	-10	36	23	90	M16x2
4T-12	304	110	220	171.4	5	36.5	16.5	10	-10	36	23	90	M16x2
4T-15	381	135	300	235	6	44.5	19.5	5	-20	45	28	110	M20x2.5

Model	K1	L	L1	M	N	P	Q max.	Q min.	R max.	R min.	S	T
4T-08	M34x1.5	4~M2	20	38	95	25	25.25	13.25	46.1	39.3	35	14
4T-10	M45x1.5	4~M16	25	43	110	30	32.25	12.75	59	51	40	16
4T-12	M45x1.5	4~M16	25	43	110	30	54.75	15.75	59	51	40	16
4T-15	M55x2	4~M20	30	51	130	30	66.5	12.5	78.9	69.1	50	21

中實指形動力夾頭
FINGER POWER CHUCK

- 採工件端面夾持，防止工件夾持變形，適合薄壁工件加工。
- 夾持補償機構，可夾持不規則端面之工件。
- Gripping at the end face and preventing deformation of workpiece.
- Suitable for thin wall workpiece processing.
- The gripping compensating mechanism can grasp the irregular surface workpieces well.

- 氣密檢知 (選配)。
- Airtight pressure detect function is optional.

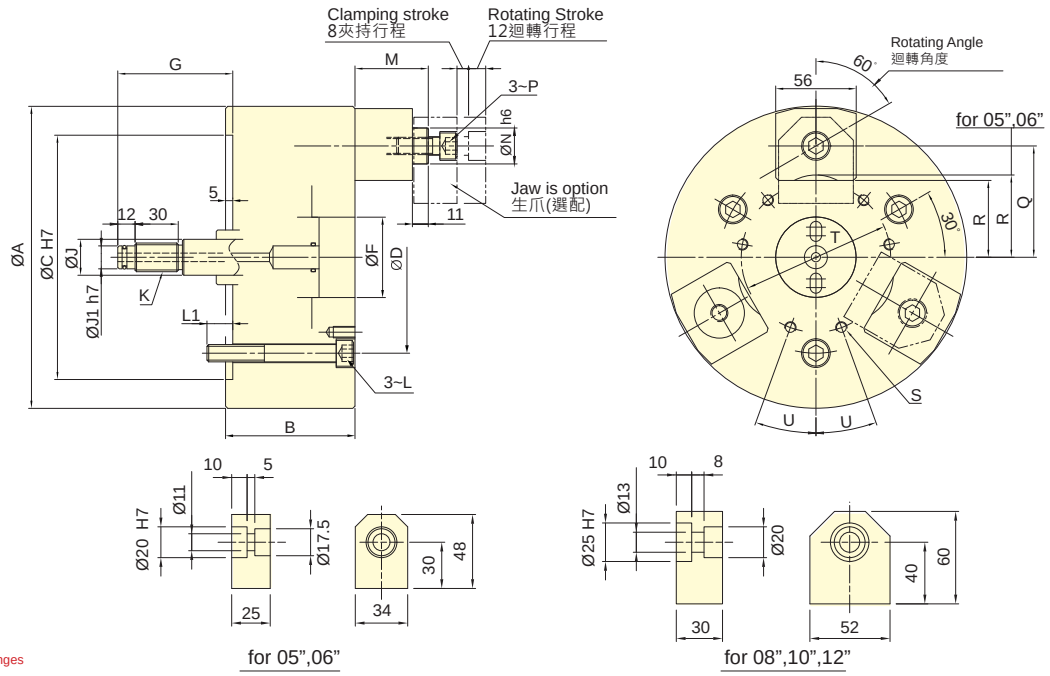

保留規格修改的權利
Subject to technical changes

技術規格 SPECIFICATIONS

型號 Model	迴轉行程 Rotating stroke (mm)	夾持行程 Claming stroke (mm)	爪補償量 Jaw's compensation (mm)	夾持直徑 Chucking Dia. 最大 Max. (mm)	夾持直徑 Chucking Dia. 最小 Min. (mm)	容許最大入力 Max. D.B. pull (kN (kgf))	最大夾持力 Max. Clamping force (kN (kgf))	最高迴轉數 Max. speed (min⁻¹ (r.p.m.))	I Moment of inertia (kg・m²)	重量 Weight (kg)	適用迴轉缸 Matching cyl.	最大使用壓力 Max. pressure (MPa (kgf/cm²))
3J-05	12	8	2	53	25	7.5(765)	6.0(612)	4000	0.02	11.0	RK-100 OR RK-100(N)	1.0(10)
3J-06	12	8	2	79	55	9.0(918)	7.5(765)	4000	0.04	12.0	RK-100 OR RK-100(N)	1.2(12)
3J-08	12	8	2	106	75	18.0(1835)	16.5(1680)	3500	0.13	23.0	RK-100 OR RK-100(N)	2.5(25)
3J-10	12	8	2.5	150	119	18.0(1835)	16.5(1680)	3500	0.30	33.0	RK-100 OR RK-100(N)	2.5(25)
3J-12	12	8	2.5	200	169	18.0(1835)	16.5(1680)	3000	0.56	44.0	RK-100 OR RK-100(N)	2.5(25)

外型尺寸 DIMENSIONS

Model	A	B	C	D	F	G max.	G min.	J	J1	K
3J-05	135	86	110	82.6	40	75	55	25	9	M12x1.75
3J-06	165	86	140	104.8	45	75	55	28	12	M16x2
3J-08	210	90	170	133.4	56	80	60	38	16	M20x2.5
3J-10	254	95	220	171.4	56	75	55	38	16	M20x2.5
3J-12	304	95	220	171.4	56	75	55	38	16	M20x2.5

Model	L	L1	M max.	M min.	N	P	Q	R	S	T	U
3J-05	M10	15	56	36	20	M10	42.5	27	3~M6	50	-
3J-06	M10	15	56	36	20	M10	57.5	40	3~M8	64	-
3J-08	M12	18	71	51	25	M12	77.5	53.5	6~M8	104	20°
3J-10	M16	24	71	51	25	M12	99.5	75.5	6~M8	140	20°
3J-12	M16	24	71	51	25	M12	124.5	100.5	6~M8	190	20°

中實指形動力夾頭
FINGER POWER CHUCK

- 採工件端面夾持，防止工件夾持變形，適合薄壁工件加工。
- 夾持補償機構，可夾持不規則端面之工件。
- Gripping at the end face and preventing deformation of workpiece.
- Suitable for thin wall workpiece processing.
- The gripping compensating mechanism can grasp the irregular surface workpieces well.

- 氣密檢知 (選配)。
- Airtight pressure detect function is optional.

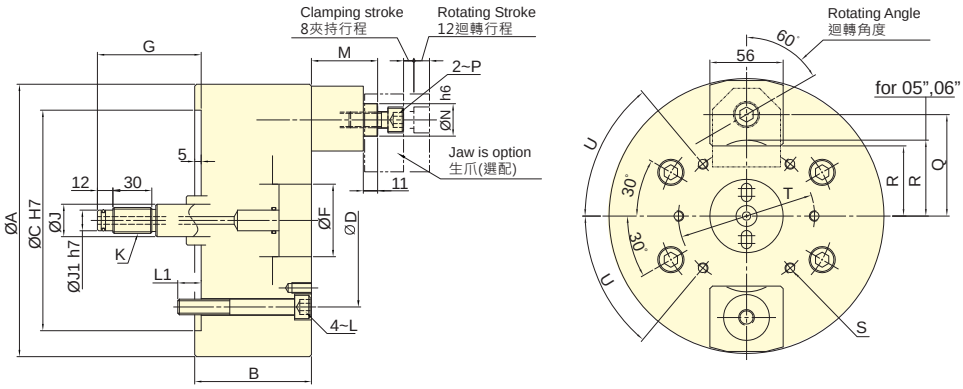

for 05",06"

for 08",10",12"

保留規格修改的權利
Subject to technical changes

技術規格 SPECIFICATIONS

型號	迴轉行程	夾持行程	爪補償量	夾持直徑 Chucking Dia.		容許最大入力	最大夾持力	最高迴轉數	I	重量	適用迴轉缸	最大使用壓力
Model	Rotating stroke	Claming stroke	Jaw's compensation	最大 Max.	最小 Min.	Max. D.B. pull	Max. Clamping force	Max. speed	Moment of inertia	Weight	Matching cyl.	Max. pressure
	mm	mm	mm	mm	mm	kN (kgf)	kN (kgf)	min^{-1} (r.p.m.)	kg・m^2	kg		MPa (kgf/cm^2)
2J-05	12	8	2	53	25	5.0(510)	4.0(408)	4000	0.015	9.0	RK-100 OR RK-100(N)	0.7(7)
2J-06	12	8	2	79	55	6.0(612)	5.0(510)	4000	0.035	9.8	RK-100 OR RK-100(N)	0.8(8)
2J-08	12	8	2	106	75	12.0(1224)	11.0(1122)	3500	0.12	20.3	RK-100 OR RK-100(N)	1.7(17)
2J-10	12	8	2.5	150	119	12.0(1224)	11.0(1122)	3500	0.28	30.7	RK-100 OR RK-100(N)	1.7(17)
2J-12	12	8	2.5	200	169	12.0(1224)	11.0(1122)	3000	0.52	41.2	RK-100 OR RK-100(N)	1.7(17)

外型尺寸 DIMENSIONS

Model	A	B	C	D	F	G max.	G min.	J	J1	K
2J-05	135	86	110	82.6	40	75	55	25	9	M12x1.75
2J-06	165	86	140	104.8	45	75	55	28	12	M16x2
2J-08	210	90	170	133.4	56	80	60	38	16	M20x2.5
2J-10	254	95	220	171.4	56	75	55	38	16	M20x2.5
2J-12	304	95	220	171.4	56	75	55	38	16	M20x2.5

Model	L	L1	M max.	M min.	N	P	Q	R	S	T	U
2J-05	M10	15	56	36	20	M10	42.5	27	4~M6	50	30 °
2J-06	M10	15	56	36	20	M10	57.5	40	4~M8	64	30 °
2J-08	M12	18	71	51	25	M12	77.5	53.5	6~M8	104	50 °
2J-10	M16	24	71	51	25	M12	99.5	75.5	6~M8	140	50 °
2J-12	M16	24	71	51	25	M12	124.5	100.5	6~M8	190	50 °

自動分度夾頭
POWER INDEXING CHUCK

- 主軸運轉過程中進行分度操作，可於多個工作軸之間進行快速轉換。
- 夾頭內部零件均經硬化及精密研磨，並直接潤滑。
- 防水及防切屑設計。
- 高剛性結構及高重複精度。
- 獨特的分度系統及液壓系統，夾頭有壓力檢知機構，可靠性高。
- Indexing operates during the spindle rotation, can perform a quick change between multiple working axles.
- All parts of chuck hardened, ground and lubricated directly.
- Sealed against swarf, chips and coolant.
- High rigidity and high repeatability precision.
- Unique indexing system and hydraulic system, with pressure detection device in chuck, high reliability.

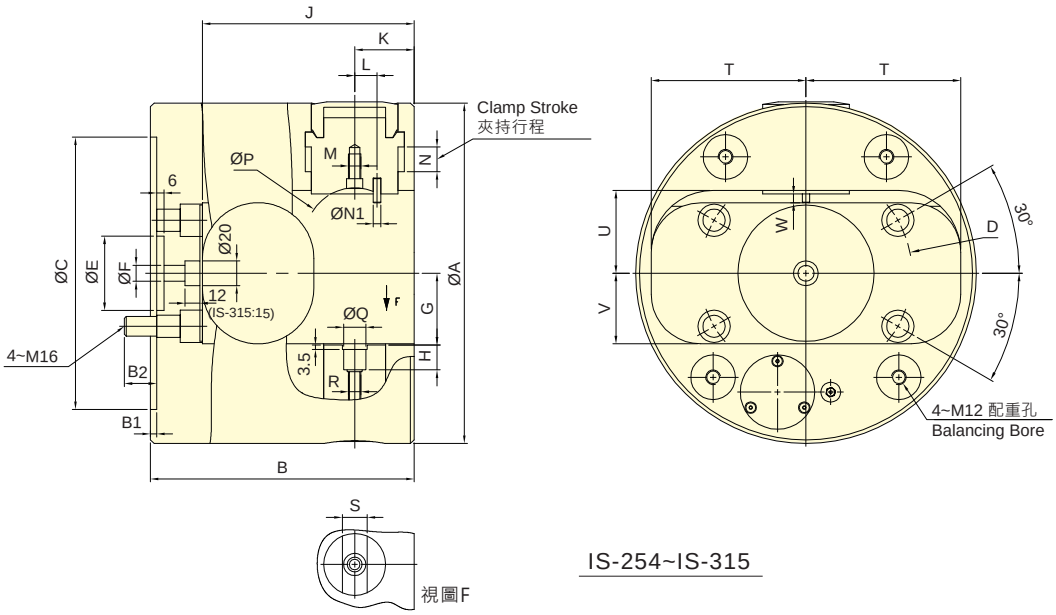

IS-254~IS-315

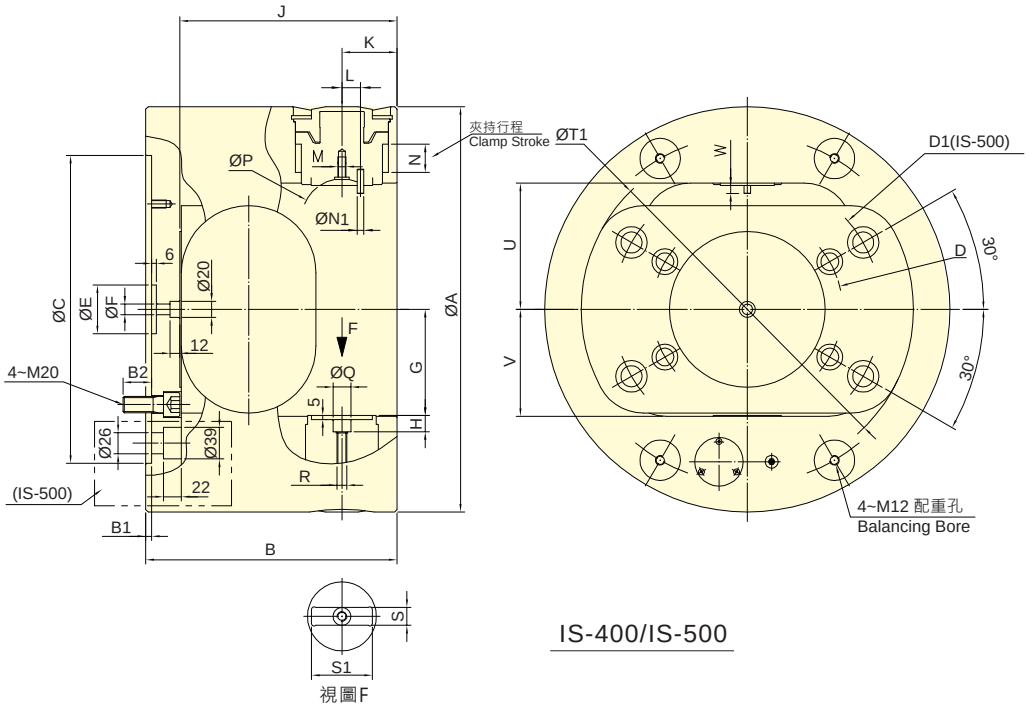

IS-400/IS-500

保留規格修改的權利
Subject to technical changes

自動分度夾頭
POWER INDEXING CHUCK

技術規格 SPECIFICATIONS

型號 Model	分度角度 Index Angle	爪行程 Jaw stroke	夾持範圍 Chucking Area 直徑Dia Max.	夾持範圍 Chucking Area 長度Len Max.	容許油壓壓力 Max. pressure	最大夾持力 Max. Clamping force	最高迴轉數 Max. speed	I Moment of inertia	重量 Weight	油壓迴轉接頭組 ROTATING JOINT	主軸內孔 Main Spindle Bore	夾持治具重量 Clamp Jaw Weight
	Deg	mm	mm	mm	kgf/cm²	kN (kgf)	min⁻¹ (r.p.m.)	kg・m²	kg		mm	kg
IS-254	4x90°	20	65	160	45	19.5(1990)	3100	0.41	41	IRJ-5E1	61 以上	0.6
IS-275	4x90°	20	80	220	45	25.4(2590)	2500	0.61	52	IRJ-5E1	61 以上	1.2
IS-315	4x90°	20	100	230	45	25.0(2550)	1200	1.13	76	IRJ-5E1	61 以上	1.8
***IS-400**	4x90°	30	170	260	45	34.5(3510)	1000	15.0	145	IRJ-5E1	61 以上	4.0
***IS-500**	4x90°	35	220	310	45	45.7(4660)	1000	25.4	230	IRJ-5E1	61 以上	6.0

外型尺寸 DIMENSIONS

Model	A	B	B1	B2	C(H6)	D	D1	E	F	G	H	J	K
IS-254	254	190	5	23	220	171.4	-	60	13	47.5	18	155	48
IS-275	275	213	5	26	220	171.4	-	60	13	58	20	171	48
IS-315	315	232	5	22	220	171.4	-	60	13	71	18.5	187	50
***IS-400**	400	260	6	30	300	235	-	60	13	99	20	220	60
***IS-500**	500	310	7	35	380	235	330.2	60	13	131	20	268	68

Model	L	M	N	N1	P	Q(H7)	R	S(H7)	S1	T	T1	U	V	W
IS-254	13	M8	20	5	40	18	M10	20	-	106	-	57	46.5	5.5
IS-275	18	M10	20	6	80	18	M10	20	-	125	-	67	57	7
IS-315	18	M10	20	6	75	24	M12	25	-	136	-	85	70	7.5
***IS-400**	23	M10	30	8	100	22	M12	22	60	-	330	112	100	10
***IS-500**	23	M10	35	8	100	22	M12	22	75	-	410	156	132	10

最高迴轉數僅在油壓壓力最大時才可達到，且工作壓力與夾持治具的重量不可超過上表所示。

主軸旋轉時可進行分度，當在高轉速進行分度時，建議將轉速降低 50%, 避免因工件處於中間位置時由於重量不平衡時而產生振動。另外，依據工件的形狀，有時無法在主軸旋轉時進行分度。

型號 * 表示接單生產之特殊規格，無現貨供應。

分度角度 8x45°或特殊分度角度，請逕洽本公司業務部。

The maximum rotational speed can only be achieved when the hydraulic pressure is at its maximum. Additionally, the operating pressure and the weight of the clamping fixture must not exceed the values shown in the table above.

Indexing can be performed while the spindle is rotating. However, when indexing at high rotational speeds, it is recommended to reduce the speed by 50% to avoid vibration caused by imbalance when the workpiece is in an intermediate position. Furthermore, depending on the shape of the workpiece, indexing during spindle rotation may not be possible.

The "*" model is produced upon order, with no stock available.
*Index Angle 8x45o or Specific Angle, Please contact AUTOGRIP for more detailed information.Thanks.

大孔徑中空氣動夾頭 (一)
LARGE THRU-HOLE AIR CHUCK

- 超大通孔徑氣動夾頭，內藏氣壓缸，適合管材加工。
- 專利注氣系統，安裝快速容易，無傳統注氣密封環損壞問題，可節省安裝及維修成本。
- Large through-hole 3-jaw power chuck with build in air cylinder.
- Patented air supply system, it is easy to install and maintain. No abrasion issue of traditional sealed ring. Maintenance cost and time can be saved.

■ 專利產品字號 Patent numbers :
德國 : 20.2011.101.818.4 /20.2012.102.498.5(Germany)
日本 : 3169457 / 3178706 (Japan) / 歐盟 : EP 2517822 B1 (EU)
大陸 : ZL 2011 2 0141324.9 /ZL 2012 2 0274549.6 (China)
台灣 : M440159 / M415011 (Taiwan) / 美國 : US8770222 B2 (U.S.A.)
義大利 : 0000278076(Italy)

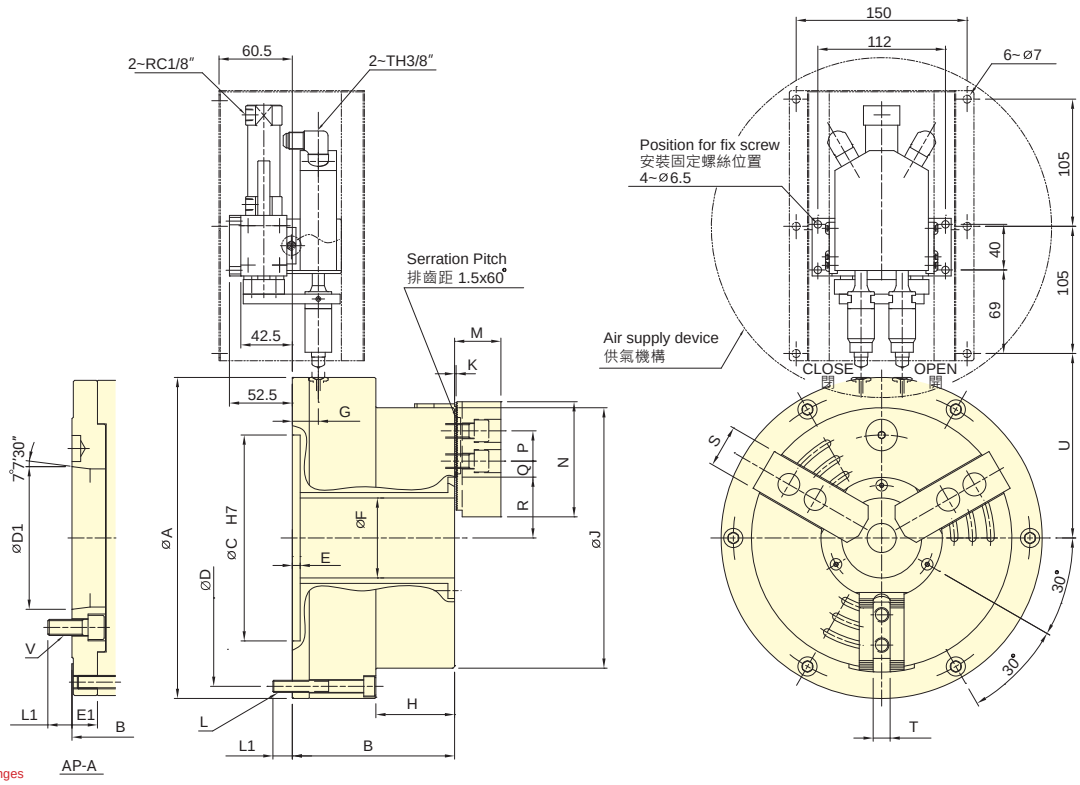

保留規格修改的權利
Subject to technical changes

技術規格 SPECIFICATIONS

型號 Model		通孔徑 Thru-hole Dia.	爪行程(直徑) Jaw stroke (Dia.)	夾持直徑 Chucking Dia. 最大 Max.	最小 Min.	最大使用壓力 Max. pressure	最大夾持力 Max. Clamping force	最高迴轉數 Max. speed	I Moment of inertia	重量 Weight		空氣消耗量 (使用壓力 6kgf/cm²) Air Consumption
		mm	mm	mm	mm	MPa (kgf/cm²)	kN (kgf)	min⁻¹ (r.p.m.)	kg • m²	kg		lit (at 6kgf/cm²)
AP-52	A6	52	5.9	170	15	0.6(6.1)	40.5(4128)	3900	0.2	26	30	3.1
AP-66	A6	66	7.6	215	24	0.6(6.1)	50(5097)	3000	0.4	38	45	5.1
AP-86	A8	86	8.9	268	43	0.6(6.1)	80(8156)	2800	0.7	58	72	8.7
AP-115	A8	115	10.6	330	55	0.6(6.1)	90(9174)	2000	1.7	92	112	12

外型尺寸 DIMENSIONS

Model		A	B		C	D	D1	E	E1	F	G	H	J	K	L
AP-52	A6	235	121	140	170	215	106.38	6.5	19	52	21.5	58.5	170	2	6~M10
AP-66	A6	265	134	153	170	245	106.38	6.5	19	66	21.5	65	215	2	6~M10
AP-86	A8	315	142	169	220	295	139.72	6.5	27	86	21.5	67	268	2	6~M10
AP-115	A8	370	154	181	220	350	139.72	6.5	27	115	21.5	69	330	2	6~M10

Model		L1		M	N	P	Q max.	Q min.	R max.	R min.	S	T	U	V
AP-52	A6	15	18	37	73	20	21.2	9.2	38	35.1	31	12	145.5	6~M12
AP-66	A6	16	18	38	95	25	23.7	8.7	50.2	46.4	35	14	159.5	6~M12
AP-86	A8	16	24	43	110	30	32.2	12.7	62.2	57.8	40	16	184.5	6~M16
AP-115	A8	16	24	51	130	30	44.7	14.7	77	71.7	50	21	212	6~M16

紅色數據為 AP-A 型之寸法 (The dimensions and the specifications of AP-A type are in red data.)

大孔徑中空氣動夾頭 (二)
LARGE THRU-HOLE AIR CHUCK

台灣精品2018
TAIWAN EXCELLENCE

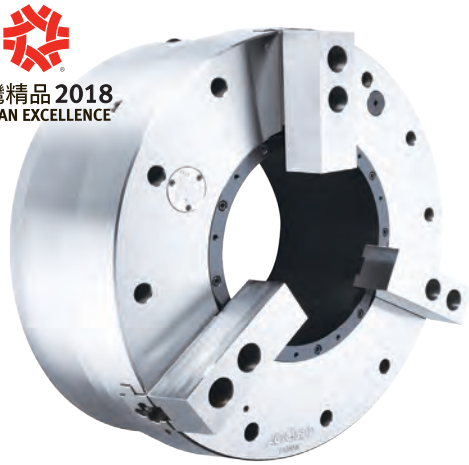

- 超大通孔徑氣動夾頭，內藏氣壓缸，適合管材加工。
- 夾頭內建有"壓力檢知"機構，能檢知夾頭內部壓力遽降，確保操作安全。(只適用於外徑夾持)
- 專利注氣系統，安裝快速容易，無傳統注氣密封環損壞問題，可節省安裝及維修成本。
- Large through-hole 3-jaw power chuck with build in air cylinder.
- With build-in "pressure detection" device in chuck which can check the pressure is lowered rapidly within the chuck, guarantee to the security of operating.(only for O.D. clamping)
- Patented air supply system, it is easy to install and maintain. No abrasion issue of traditional sealed ring. Maintenance cost and time can be saved.

■ 專利產品字號 Patent numbers :
德國 : 20.2011.101.818.4 /20.2012.102.498.5(Germany)
日本 : 3169457 / 3178706 (Japan) / 歐盟 : EP 2517822 B1 (EU)
大陸 : ZL 2011 2 0141324.9 / ZL 2012 2 0274549.6 (China)
台灣 : M440159 / M415011 (Taiwan) / 美國 : US8770222 B2 (U.S.A.)
義大利 : 0000278076(Italy)

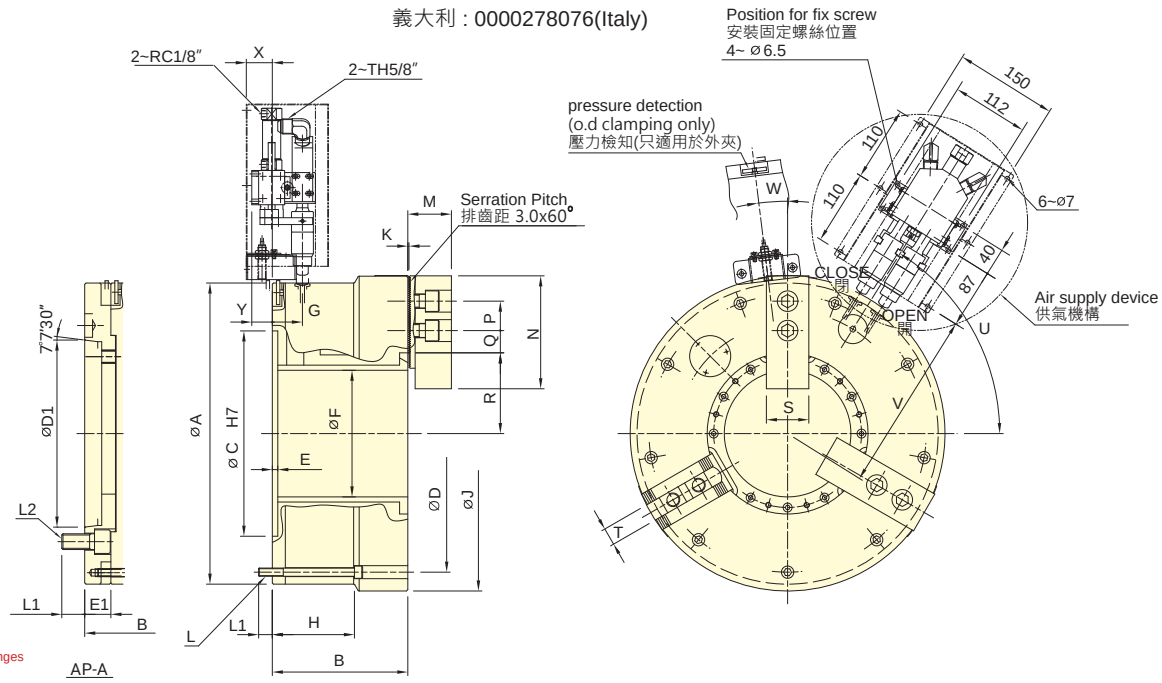

保留規格修改的權利
Subject to technical changes

技術規格 SPECIFICATIONS

型號 Model		通孔徑 Thru-hole Dia.	爪行程 (直徑) Jaw stroke (Dia.)	夾持直徑 Chucking Dia. 最大 Max.	最小Min.	最大使用壓力 Max. pressure	最大夾持力 Max. Clamping force	最高迴轉數 Max. speed	I Moment of inertia	重量 Weight		空氣消耗量 (使用壓力 6kgf/cm²) Air Consumption
		mm	mm	mm	mm	MPa (kgf/cm²)	kN (kgf)	min⁻¹ (r.p.m.)	kg・m²	kg		lit(at 6kgf/cm²)
AP-145	A11	145	14	420	62	0.6(6.1)	110(11213)	1500	3.8	156	182	17.8
AP-185	A15	185	14	460	100	0.6(6.1)	160(16310)	1700	6.0	188	223	22
AP-230	A15	230	17	535	170	0.6(6.1)	150(15290)	1300	11.1	265	310	34
AP-275	A20	275	17	580	200	0.6(6.1)	160(16310)	1100	15.5	301	346	39
AP-320	A20	320	17	658	200	0.6(6.1)	180(18348)	1000	27.2	415	505	45
AP-375	A20	375	24	738	260	0.6(6.1)	210(21406)	900	44.2	530	545	55

外型尺寸 DIMENSIONS

Model		A	B		C	D	D1	E	E1	F	G	H	J	K	L	L1	
AP-145	A11	400	198	231	300	365	196.87	8	33	145	34	120	420	3.5	9~M12	20	31
AP-185	A15	460	198	238	300	405	285.78	8	40	185	44	120	460	3.5	9~M12	20	35
AP-230	A15	515	226	266	380	483	285.78	8	40	230	49	145	535	3.5	6~M16	24	35
AP-275	A20	560	232	272	380	528	412.78	8	40	275	52	152	580	3.5	6~M16	24	35
AP-320	A20	615	256	306	520	580	412.78	8	50	320	55	116.5	658	3.5	9~M16	25	33
AP-375	A20	690	272	322	520	650	412.78	8	50	375	55	127	738	3.5	9~M16	28	33

Model		L2	M	N	P	Q max.	Q min.	R max.	R min.	S	T	U	V	W	X	Y
AP-145	A11	6~M20	63.7	165	43	53.5	23.5	98	91	62	25.5	57 °	242	0 °	38	20
AP-185	A15	6~M24	63.7	165	43	53.5	23.5	118	111	62	25.5	58 °	272	7 °	38	20
AP-230	A15	6~M24	71.7	180	60	48.5	18.5	145	136.5	64	25.5	30 °	300	7 °	33	15
AP-275	A20	6~M24	71.7	180	60	48.5	18.5	167.5	159	64	25.5	30 °	322	7 °	30	12
AP-320	A20	6~M24	81.5	210	60	60.5	24.5	190	181.5	74	30	52 °	350	7 °	27	9
AP-375	A20	6~M24	81.5	210	60	66.5	24.5	223.5	211.5	74	30	52 °	387	7 °	27	9

紅色數據為 AP-A 型之寸法 (The dimensions and the specifications of AP-A type are in red data.)

大孔徑中空氣動夾頭 (二段式行程)
LARGE THRU-HOLE AIR CHUCK (DOUBLE SPEED JAW STROKE)

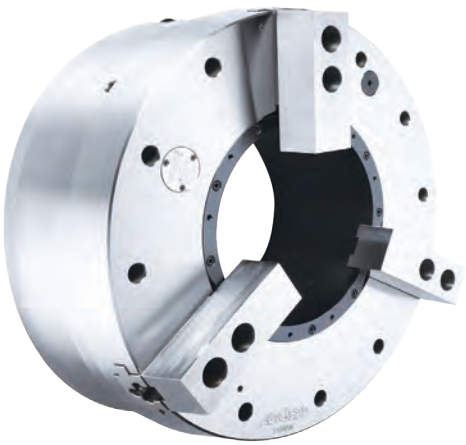

- 超大通孔徑氣動夾頭，內藏氣壓缸，適合管材加工。
- 夾頭內建有"壓力檢知"機構，能檢知夾頭內部壓力遽降，確保操作安全。
- 專利注氣系統，安裝快速容易，無傳統注氣密封環損耗問題，可節省安裝及維修成本。
- 夾頭內建有"夾持檢知"機構，能避免夾爪於快速位移行程中夾持工件，進而導致內部零件損壞或工件飛脫所設計之機構。(只適用於外徑夾持)
- 兩段式行程，可節省夾持所需要時間。
- Large through-hole 3-jaw power chuck with build in air cylinder.
- With build-in"pressure detection"device which can check the rapidly decreasing pressure within the chuck, guarantee to the security when operating.
- Patented air supply system, it is easy to install and maintain. No abrasion issue of traditional sealed ring. Maintenance cost and time can be saved.
- The build-in "clamping detection" device can avoid jaws clamping the workpiece during the rapid stroke stage. This mechanism can also prevent causing the damage of the internal parts or flying out of workpiece.(only for O.D. clamping)
- Extended jaw stroke design can shorten the processing time when gripping.

■ 注意：快速行程階段無法提供足夠之夾持力。
■ Notice：No clamping in rapid stroke period.

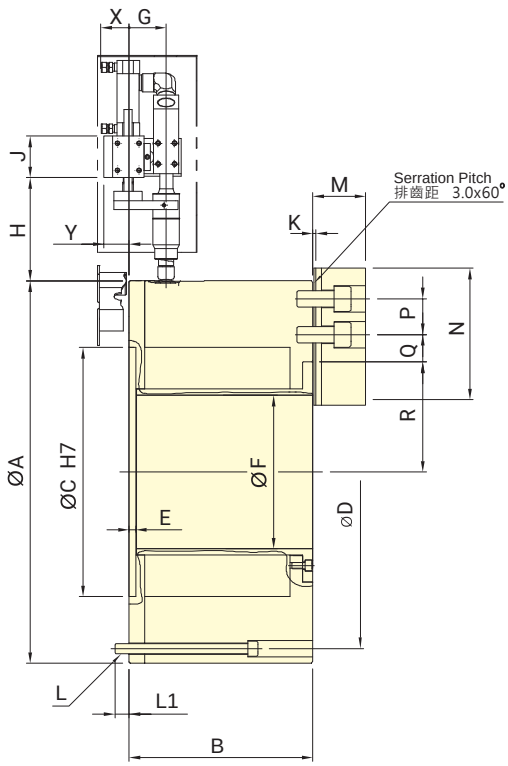

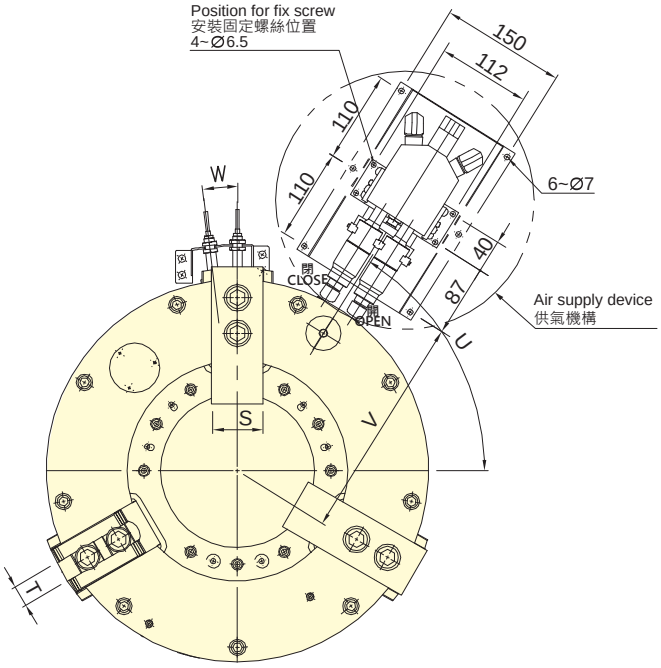

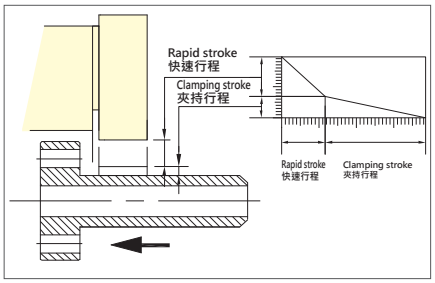

技術規格 SPECIFICATIONS

型號	通孔徑	爪行程 (直徑)		夾持 直徑 Chucking Dia.		最大夾持力	最高迴轉數	I	重量	空氣消耗量 (使用壓力 6kgf/cm²)
Model	Thru-hole Dia.	Jaw stroke (Dia.)		最大 Max.	最小Min.	Max. Clamping force	Max. speed	Moment of inertia	Weight	Air Consumption
	mm	mm		mm	mm	kN (kgf)	min^{-1}(r.p.m.)	kg・m²	kg	lit(at 6kgf/cm²)
APS-185	185	26	14	460	127	110(11216)	1300	6.45	198	22

外型尺寸 DIMENSIONS

Model	A	B	C	D	E	F	G	H	J	K	L	L1	M
APS-185	460	221	300	425	8	185	45	124	50	3.5	9~M12	17	63.7

Model	N	P	Q max.	Q min.	R max.	R min.	S	T	U	V	W	X	Y
APS-185	165	43	37	17	145	125	62	25.5	58	272	7 °	38	30

筒夾夾頭
COLLET CHUCK

- 前推式彈性筒夾夾頭，適合CNC車床，專用機，或其他旋削機械。
- 高精度，高轉速及高剛性結構。
- 全面防水設計，防止切削水進入主軸通孔處。
- PUSH type collet used mainly on turning, CNC, special purpose machines , ect.
- High clamping accuracy, high speed and high rigidity.
- Sealed against swarf, chips and coolant.
- 搭配彈性筒夾須符合 DIN 6343 規範。
- The collet used must accord with DIN 6343.
- 專利產品字號 Patent numbers :
  台灣 : PAT.NO.M380842(Taiwan)
  大陸 : PAT.NO.ZL201020113762.X(China)

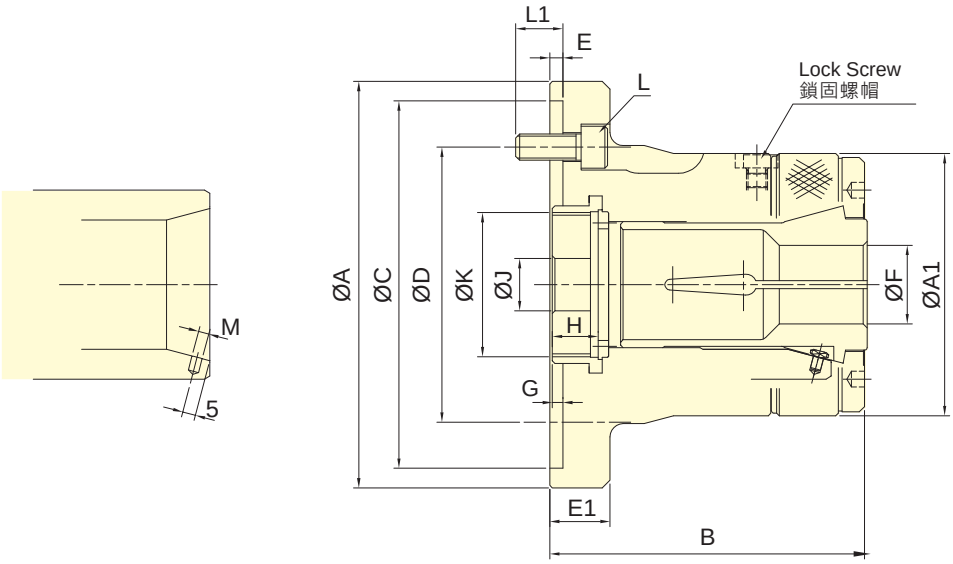

技術規格 SPECIFICATIONS

型號 Model	套筒行程 Plunger stroke	最大夾持能力 Max. Chucking Capacity 圓棒 Round	六角材 Hexagom	方材 Square	容許最大入力 Max. D.B. pull	最大夾持力 Max. clamping force	最高迴轉數 Max. speed	I Moment of inertia	重量 Weight	使用筒夾 Matching steel collet	適用迴轉缸 Matching Cyl.	最大使用壓力 Max. pressure
	mm	mm	mm	mm	kN (kgf)	kN (kgf)	min^{-1} (r.p.m.)	$kg{\cdot}m^2$	kg			MPa (kgf/cm^2)
CL-26	4.5	3~26	4~22	4~18	17.6(1800)	37.9(3870)	8000	0.040	4.3	161E	TK-A533	2.4(24)
CL-30	4.5	3~30	4~26	4~20	19.6(2000)	42.1(4300)	8000	0.038	4.2	163E	TK-A533	2.7(27)
CL-36	6	3~36	6~32	6~26	22.5(2300)	48.5(4950)	6000	0.062	7.0	171E	TK-C643	2.3(23)
CL-42	6	3~42	6~36	6~29	24.5(2500)	52.9(5400)	6000	0.060	6.9	173E	TK-C643	2.5(25)
CL-52	6	5~52	8~45	7~36	27.4(2800)	59.0(6020)	6000	0.101	14.3	177E	TK-A853	2.0(20)
CL-6017	6	5~60	8~52	7~42	29.4(3000)	63.7(6500)	5000	0.098	14.1	185E	TS-866	1.8(18)
CL-6022	6	5~60	8~52	7~42	29.4(3000)	63.7(6500)	5000	0.126	16.3	185E	TS-866	1.8(18)
CL-80	6	20~80	18~69	15~56	34.3(3500)	71.5(7300)	4000	0.108	17.8	193E	TK-A1287	1.6(16)

外型尺寸 DIMENSIONS

Model	A	A1	B	C(H6)	D	E	E1	F max.	F min.	G max.	G min.	H	J	K max.	L	L1	M
CL-26	120	85	100	110	82.6	4	23	26	3	7	2.5	15	12	M40x1.5	3~M10x25	16	4
CL-30	120	85	100	110	82.6	4	23	30	3	7	2.5	15	12	M40x1.5	3~M10x25	16	4
CL-36	155	100	120	140	104.8	5	23	36	3	7	1	17.5	20	M55x2	3~M10x25	18	4
CL-42	155	100	120	140	104.8	5	23	42	3	7	1	17.5	20	M55x2	3~M10x25	18	4
CL-52	185	130	145.5	170	133.4	5	27	52	5	9	3	24	30	M60x2	6~M12x30	20	5
CL-6017	185	130	145.5	170	133.4	5	27	60	5	9	3	24	45	M75x2	6~M12x30	20	5
CL-6022	234	130	142	220	171.4	5	32	60	5	13	7	24	45	M85x2	6~M16x30	20	5
CL-80	234	156	163	220	171.4	5	32	80	20	15.5	9.5	22	45	M100x2	6~M16x30	20	5

筒夾夾頭
COLLET CHUCK

- 前推式彈性筒夾夾頭，適合CNC車床，專用機，或其他旋削機械。
- 高精度，高轉速及高剛性結構。
- 全面防水設計，防止切削水進入主軸通孔處。

- PUSH type collet used mainly on turning, CNC, special purpose machines , ect.
- High clamping accuracy, high speed and high rigidity.
- Sealed against swarf, chips and coolant.

- 搭配彈性筒夾須符合 DIN 6343 規範。
- The collet used must accord with DIN 6343.

- 專利產品字號 Patent numbers :
  台灣 : PAT.NO.M380842(Taiwan)
  大陸 : PAT.NO.ZL201020113762.X(China)

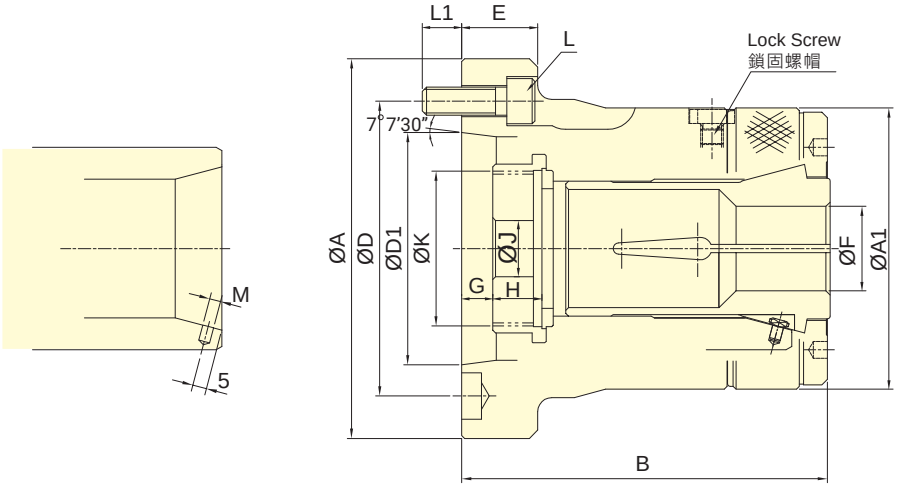

保留規格修改的權利
Subject to technical changes

技術規格 SPECIFICATIONS

型號 Model		套筒行程 Plunger stroke	最大夾持能力 Max. Chucking Capacity 圓棒 Round	六角材 Hexagom	方材 Square	容許最大入力 Max. D.B. pull	最大夾持力 Max. clamping force	最高迴轉數 Max. speed	I Moment of inertia	重量 Weight	使用筒夾 Matching steel collet	適用迴轉缸 Matching Cyl.	最大使用壓力 Max. pressure
		mm	mm	mm	mm	kN (kgf)	kN (kgf)	min^{-1} (r.p.m.)	$kg{\cdot}m^2$	kg			MPa (kgf/cm^2)
CL-26	A4	4.5	3~26	4~22	4~18	17.6(1800)	37.9(3870)	8000	0.040	4.2	161E	TK-A533	2.4(24)
CL-30	A4	4.5	3~30	4~26	4~20	19.6(2000)	42.1(4300)	8000	0.038	4.1	163E	TK-A533	2.7(27)
CL-36	A5	6	3~36	6~32	6~26	22.5(2300)	48.5(4950)	6000	0.058	6.3	171E	TK-C643	2.3(23)
CL-42	A5	6	3~42	6~36	6~29	24.5(2500)	52.9(5400)	6000	0.057	6.1	173E	TK-C643	2.5(25)
CL-42	A6	6	3~42	6~36	6~29	24.5(2500)	52.9(5400)	6000	0.061	7.5	173E	TK-C643	2.5(25)
CL-52	A6	6	5~52	8~45	7~36	27.4(2800)	59.0(6020)	6000	0.093	13.8	177E	TK-A853	2.0(20)
CL-60	A6	6	5~60	8~52	7~42	29.4(3000)	63.7(6500)	5000	0.091	13.5	185E	TS-866	1.8(18)
CL-60	A8	6	5~60	8~52	7~42	29.4(3000)	63.7(6500)	5000	0.104	14.5	185E	TS-866	1.8(18)
CL-80	A8	6	20~80	18~69	15~56	34.3(3500)	71.5(7300)	4000	0.120	19.8	193E	TK-A1287	1.6(16)

外型尺寸 DIMENSIONS

Model		A	A1	B	D	D1	E	F max.	F min.	G max.	G min.	H	J	K max.	L	L1	M
CL-26	A4	110	85	108	82.6	63.51	25	26	3	9.5	5	15	12	M40x1.5	3~M10x30	15	4
CL-30	A4	110	85	108	82.6	63.51	25	30	3	9.5	5	15	12	M40x1.5	3~M10x30	15	4
CL-36	A5	135	100	130	104.8	82.56	27	36	3	14	8	17.5	20	M55x2	4~M10x30	14	4
CL-42	A5	135	100	130	104.8	82.56	27	42	3	14	8	17.5	20	M55x2	4~M10x30	14	4
CL-42	A6	165	100	130	133.4	106.38	32	42	3	15	9	17.5	20	M60x2	4~M12x35	16	4
CL-52	A6	170	130	154	133.4	106.38	27	52	5	10.5	4.5	24	45	M60x2	4~M12x35	20	5
CL-60	A6	170	130	154	133.4	106.38	27	60	5	10.5	4.5	24	45	M75x2	4~M12x35	20	5
CL-60	A8	210	130	147.5	171.4	139.72	35	60	5	3.5	-2.5	24	45	M85x2	4~M16x40	22	5
CL-80	A8	210	156	175	171.4	139.72	35	80	20	7.5	1.5	22	45	M100x2	6~M16x40	22	5

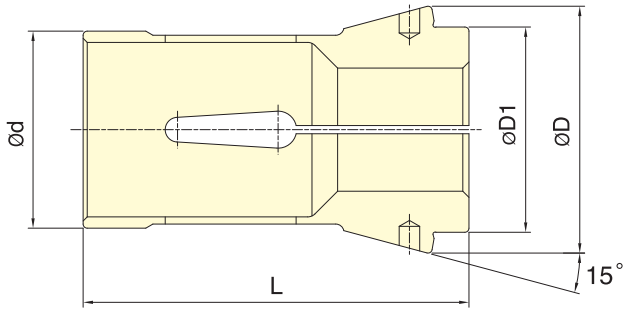

DIN 6343 Collet standard
筒夾規範

保留規格修改的權利
Subject to technical changes

外型尺寸 DIMENSIONS

彈性筒夾 Collet	最大夾持能力 Max. Chucking Capacity (mm)			d	D	D1	L	適合筒夾夾頭 Matching Collet Chuck
	圓棒 Round	六角材 Hexagom	方材 Square					
161E	3~26	4~22	4~18	32	45	34	75	CL-26, CL-26A4
163E	3~30	4~26	4~20	35	48	38	80	CL-30, CL-30A4
171E	3~36	6~32	6~26	42	55	42	94	CL-36, CL-36A5
173E	3~42	6~36	6~29	48	60	50	94	CL-42, CL-42A5, CL-42A6
177E	5~52	8~45	7~36	58	70	60	94	CL-52, CL-52A6
185E	5~60	8~52	7~42	66	84	73	110	CL-6017, CL-6022, CL-60A6, CL-60A8
193E	20~80	18~69	15~56	90	107	92	130	CL-80, CL-80A8

測棒D(S,H) Test Bar D(S,H)	L mm	A DIN	
		Class 1	Class 2
0.5~1.0	3	0.015	0.015
1.0~1.6	6	0.015	0.020
1.6~3.0	10	0.015	0.020
3.0~6.0	16	0.015	0.020
6.0~10.0	25	0.015	0.020
10.0~18.0	40	0.020	0.030
18.0~24.0	50	0.020	0.030
24.0~30.0	60	0.020	0.030
30.0~50.0	80	0.030	0.040
50.0~60.0	100	0.030	0.040

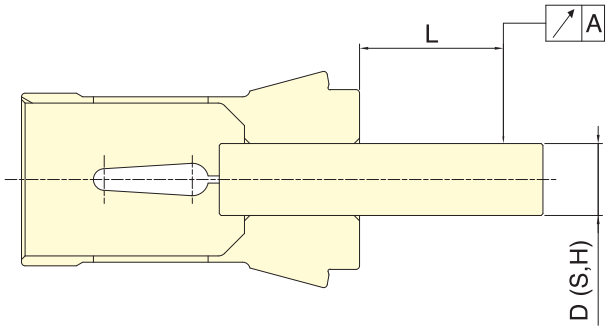

註 : 一般內筒夾 精度為 DIN 二級
Note: Collets chuck are conformed to DIN 6343 Class2.

CB/CB-A 後拉式筒夾夾頭
DRAW BACK COLLET CHUCK

- 適合CNC車床，專用機，或其他旋削機械，作棒材或心軸加工用。
- 後拉夾持，具徑向夾持與軸向微調力矩，貫通孔徑。
- 高精度，高轉速及高剛性結構。
- 全面防水設計，防止切削水進入主軸通孔處。
- Ideal for CNC lathes, specialized machines, and turning equipment for bar stock or shaft machining.
- Draw-back clamping with radial clamping and axial fine-tuning torque, featuring through-hole.
- Offers high precision, speed, and rigidity.
- Features a comprehensive waterproof design to prevent cutting fluid from entering the spindle through-hole.

■ J 值為連結螺帽未車製螺牙時的孔徑。
K max 值為連結螺帽可車製螺牙之最大規格，可依實際需求訂製。

■ J is the hole diameter of blank draw nut.
K is the maximum thread specification and it could be customize.

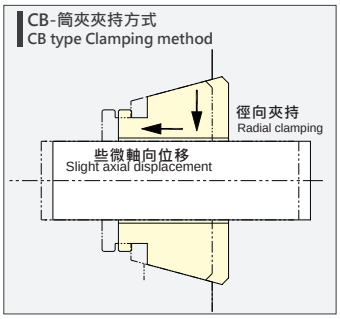

夾緊時，工件隨著筒夾稍微往後位移。
During clamping, the workpiece shifts slightly backward along with the collet.

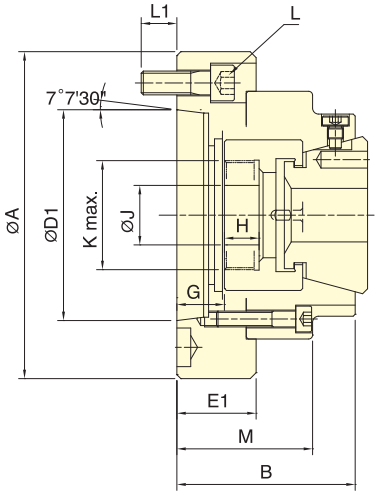

CB-A

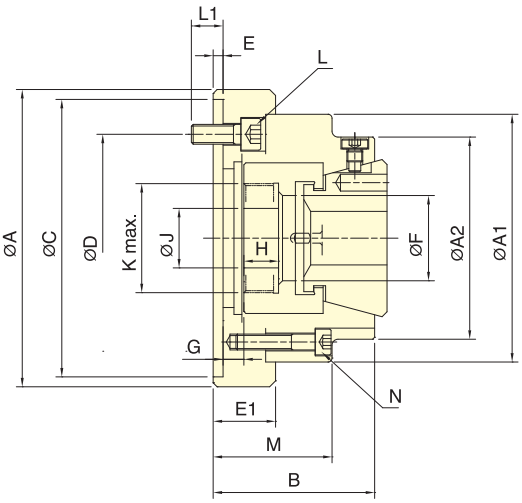

CB

保留規格修改的權利
Subject to technical changes

技術規格 SPECIFICATIONS

型號 Model		套筒行程 Plunger stroke	最大夾持能力 Max. Chucking Capacity 圓棒 Round	六角材 Hexagom	方材 Square	容許最大入力 Max. D.B. pull	最大夾持力 Max. clamping force	最高迴轉數 Max. speed	重量 Weight	使用筒夾 Matching steel collet	適用迴轉缸 Matching Cyl.	最大使用壓力 Max. pressure
		mm	mm	mm	mm	kN (kgf)	kN (kgf)	min^{-1} (r.p.m.)	kg			MPa (kgf/cm^2)
CB-42		4.5	4~42	7~36	7~30	34.3(3500)	78.4(8000)	7000	6.5	RG-42	TK-B846	2.8(28)
CB-42	A5	4.5	4~42	7~36	7~30	34.3(3500)	78.4(8000)	7000	6.2	RG-42	TK-B846	2.8(28)
CB-42	A6	4.5	4~42	7~36	7~30	34.3(3500)	78.4(8000)	7000	7.4	RG-42	TK-B846	2.8(28)
CB-52		4.5	4~52	7~36	7~45	39.2(4000)	92.1(9400)	7000	6	RG-52	TK-A853	3.2(32)
CB-5217		4.5	4~52	7~36	7~45	39.2(4000)	92.1(9400)	7000	9.6	RG-52	TK-A853	3.2(32)
CB-52	A5	4.5	4~52	7~36	7~45	39.2(4000)	92.1(9400)	7000	6.5	RG-52	TK-A853	3.2(32)
CB-52	A6	4.5	4~52	7~36	7~45	39.2(4000)	92.1(9400)	7000	7.8	RG-52	TK-A853	3.2(32)
CB-65		4.5	4~65	8~56	8~46	44.1(4500)	103(10500)	5500	15	RG-65	TS-866	3.0(30)
CB-65	A6	4.5	4~65	8~56	8~46	44.1(4500)	103(10500)	5500	13.6	RG-65	TS-866	3.0(30)
CB-65	A8	4.5	4~65	8~56	8~46	44.1(4500)	103(10500)	5500	17.6	RG-65	TS-866	3.0(30)
CB-80		4.5	5~80	8~68	8~56	50.0(5100)	115(11730)	5500	19	RG-80	TK-A1287	2.3(23)
CB-80	A8	4.5	5~80	8~68	8~56	50.0(5100)	115(11730)	5500	19	RG-80	TK-A1287	2.3(23)

外型尺寸 DIMENSIONS

Model		A	A1	A2	B	C(H6)	D	D1	E	E1	F	G max.	G min.	H	J	K max.	L	L1	M	N
CB-42		150	125	102	81.5	140	104.8	-	5	31	43	10.5	6	17.5	30	M55x2	3~M10x25	11	60	4~M8
CB-42	A5	140	125	102	91.5	-	104.8	82.56	-	41.5	43	25.5	21	17.5	30	M55x2	4~M10x25	12	70	4~M8
CB-42	A6	165	125	102	91.5	-	133.4	106.38	-	45	43	29	24.5	17.5	30	M55x2	4~M12x35	18	73.5	4~M8
CB-52		150	125	102	83.5	140	104.8	-	5	31.5	53	11	6.5	17.5	30	M60x2	4~M10x25	16	62.5	4~M8
CB-5217		180	125	102	87	170	133.4	-	5	35	53	14.5	10	17.5	30	M60x2	4~M12x30	18	66	4~M8
CB-52	A5	140	125	102	93.5	-	104.8	82.56	-	41.5	53	26	21.5	17.5	30	M60x2	4~M10x30	16	72.5	4~M8
CB-52	A6	165	125	102	99	-	133.4	106.38	-	47	53	31.5	27	17.5	30	M60x2	6~M12x35	18	78	4~M8
CB-65		185	145	120	100	170	133.4	-	6	50	66	13.5	9	21.5	32	M75x2	6~M12x40	20	73.5	4~M8
CB-65	A6	165	145	120	111	-	133.4	106.38	-	61	66	30.5	26	21.5	32	M75x2	4~M12x40	20	84.5	4~M8
CB-65	A8	207	145	120	107	-	171.4	139.72	-	57	66	26.5	22	21.5	32	M75x2	4~M16x40	24	80.5	4~M8
CB-80		235	175	150	112	220	171.4	-	5	37	82.5	13.5	8	25	45	M85x2	6~M16x30	22	87	6~M10
CB-80	A8	210	175	150	125	-	171.4	139.72	-	50	82.5	26.5	21	25	45	M85x2	6~M16x50	24	100	6~M10

CBE/CBE-A 後拉定位式橡膠筒夾夾頭
END STOP COLLET CHUCK

- 後拉定位夾持，配合擋料塊機構，具徑向夾持與軸向微調力矩，可精準定位工件入料長度，使長度精度控制更加精準。
- 擋料塊與防塵蓋可互換搭配使用，應用與防屑功能可以兼顧。
- The pull-back positioning clamping, combined with the workpiece stop block mechanism, features radial clamping and axial fine-tuning torque, enabling precise positioning of the workpiece feeding length for enhanced length accuracy control.
- The blocking block and dust cover can be swapped for versatile use and chip protection.

- J 值為連結螺帽未車製螺牙時的孔徑。
- K max 值為連結螺帽可車製螺牙之最大規格，可依實際需求訂製。
- J is the hole diameter of blank draw nut.
- K is the maximum thread specification and it could be customize.

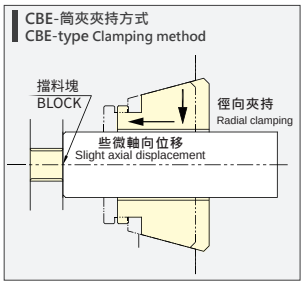

配合擋料機構,夾緊時,工件不會往後位移,表面會有些許擦痕。
With the material stop mechanism in place, the workpiece does not shift backward during clamping, although there may be slight scuff marks on the surface.

保留規格修改的權利
Subject to technical changes

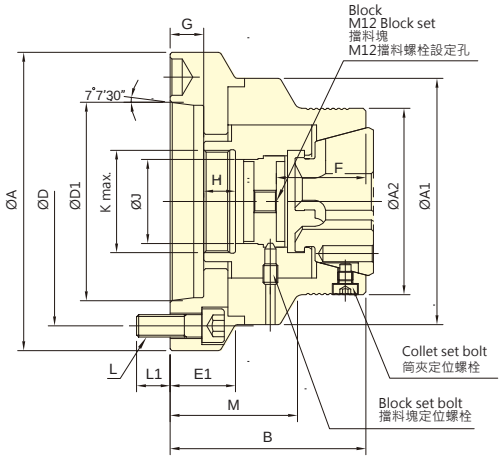

CBE-A

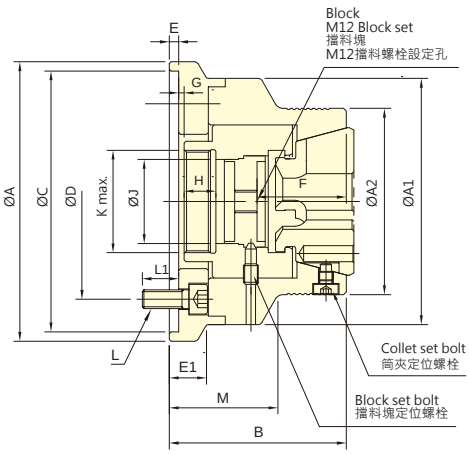

CBE

技術規格 SPECIFICATIONS

型號 Model		套筒行程 Plunger stroke	最大夾持能力 Max. Chucking Capacity 圓棒 Round	六角材 Hexagom	方材 Square	容許最大入力 Max. D.B. pull	最大夾持力 Max. clamping force	最高迴轉數 Max. speed	重量 Weight	使用筒夾 Matching steel collet	適用迴轉缸 Matching Cyl.	最大使用壓力 Max. pressure
		mm	mm	mm	mm	kN (kgf)	kN (kgf)	min^{-1} (r.p.m.)	kg			MPa (kgf/cm^2)
CBE-42		4.5	4~42	7~36	7~30	34.3(3500)	78.4(8000)	7000	6	RG-42	TK-B846	2.8(28)
CBE-4212		4.5	4~42	7~36	7~30	34.3(3500)	78.4(8000)	7000	6	RG-42	TK-B846	2.8(28)
CBE-42	A5	4.5	4~42	7~36	7~30	34.3(3500)	78.4(8000)	7000	6.3	RG-42	TK-B846	2.8(28)
CBE-42	A6	4.5	4~42	7~36	7~30	34.3(3500)	78.4(8000)	7000	7.4	RG-42	TK-B846	2.8(28)
CBE-52		4.5	4~52	7~36	7~30	39.2(4000)	92.1(9400)	7000	6.9	RG-52	TK-A853	3.2(32)
CBE-5212		4.5	4~52	7~36	7~30	39.2(4000)	92.1(9400)	7000	6.7	RG-52	TK-A853	3.2(32)
CBE-5217		4.5	4~52	7~36	7~30	39.2(4000)	92.1(9400)	7000	8.9	RG-52	TK-A853	3.2(32)
CBE-52	A5	4.5	4~52	7~36	7~30	39.2(4000)	92.1(9400)	7000	7.8	RG-52	TK-A853	3.2(32)
CBE-52	A6	4.5	4~52	7~36	7~30	39.2(4000)	92.1(9400)	7000	8.3	RG-52	TK-A853	3.2(32)
CBE-65		4.5	4~65	8~56	8~46	44.1(4500)	103(10500)	6000	8.6	RG-65	TS-866	3.0(30)
CBE-6514		4.5	4~65	8~56	8~46	44.1(4500)	103(10500)	6000	9.3	RG-65	TS-866	3.0(30)
CBE-65	A5	4.5	4~65	8~56	8~46	44.1(4500)	103(10500)	6000	10.8	RG-65	TS-866	3.0(30)
CBE-65	A6	4.5	4~65	8~56	8~46	44.1(4500)	103(10500)	6000	9.5	RG-65	TS-866	3.0(30)
CBE-65	A8	4.5	4~65	8~56	8~46	44.1(4500)	103(10500)	6000	9.5	RG-65	TS-866	3.0(30)

外型尺寸 DIMENSIONS

Model		A	A1	A2	B	C (H6)	D	D1	E	E1	F	G max.	G min.	H	J	K max.	L	L1	M
CBE-42		150	132	100	95	140	104.8	-	5	20	48	5.5	1	17	45	M55x2	4~M10x25	19.5	58
CBE-4212		132	132	100	95	120	100	-	5	-	48	5.5	1	17	45	M55x2	4~M10x25	19.5	58
CBE-42	A5	132	132	100	105	-	104.8	82.56	-	-	48	20.5	16	17	45	M55x2	4~M10x30	16	68
CBE-42	A6	160	132	100	105	-	133.4	106.38	-	35	48	20.5	16	17	45	M55x2	4~M12x35	18	68
CBE-52		150	140	107	99	140	104.8	-	5	-	52	5.5	1	17	56	M60x2	4~M10x20	14.5	60
CBE-5212		140	140	107	99	120	100	-	5	-	52	5.5	1	17	56	M60x2	4~M10x20	14.5	60
CBE-5217		180	140	107	109	170	133.4	-	6	-	52	14.5	10	17	56	M60x2	4~M12x30	18	70
CBE-52	A5	140	140	107	109	-	104.8	82.56	-	-	52	20.5	16	17	56	M60x2	4~M10x30	16	70
CBE-52	A6	160	140	107	109	-	133.4	106.37	-	-	52	20.5	16	17	56	M60x2	4~M12x35	18	70
CBE-65		180	157	122	114	170	133.4	-	6	24	56	15	10.5	17.5	68	M75x2	4~M12x30	18	72
CBE-6514		157	157	122	116	140	104.8	-	6	-	56	17	12.5	17.5	68	M75x2	4~M10x30	18	74
CBE-65	A5	157	157	122	114	-	104.8	82.56	-	-	56	21	16.5	17.5	68	M75x2	4~M10x25	16	72
CBE-65	A6	157	157	122	112	-	133.4	106.38	-	-	56	19	14.5	17.5	68	M75x2	4~M12x35	18.5	70
CBE-65	A8	202	157	122	116	-	171.4	139.72	-	38	56	23	18.5	17.5	68	M75x2	4~M16x35	24	74

CBD/CBD-A 前推固定式橡膠筒夾夾頭
DEAD LENGTH COLLET CHUCK

- 前推夾持，搭配擋料塊機構，具徑向夾持徑向零移位，可精準定位工件入料長度，使長度精度控制更加精準。
- 搭配AUTOGRIP橡膠筒夾，不會產生一般彈性筒夾將工件往前推的情況，可使工件表面不受損。
- 擋料塊與防塵蓋可互換搭配使用，通孔應用與防屑功能可以兼顧，適合副主軸夾持，可減少夾持的拉壓力現象。
- The push-forward clamping, combined with a stop block mechanism, features radial clamping with zero radial displacement, enabling precise positioning of the workpiece feeding length for improved length accuracy control.
- AUTOGRIP rubber tube clamping eliminates forward pushing, minimizing surface damage.
- Interchangeable workpiece stopper and dust cover enable through-hole applications and chip protection, suitable for sub-spindle clamping, reducing tension and compression.

- J 值為連結螺帽未車製螺牙時的孔徑。
  K max 值為連結螺帽可車製螺牙之最大規格，可依實際需求訂製。
- J is the hole diameter of blank draw nut.
  K is the maximum thread specification and it could be customize.

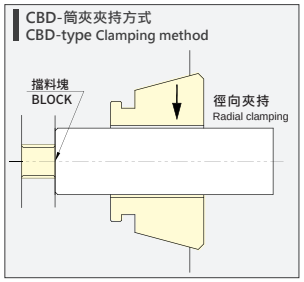

夾緊時，工件不會往前位移。
When clamping, the workpiece does not shift forward.

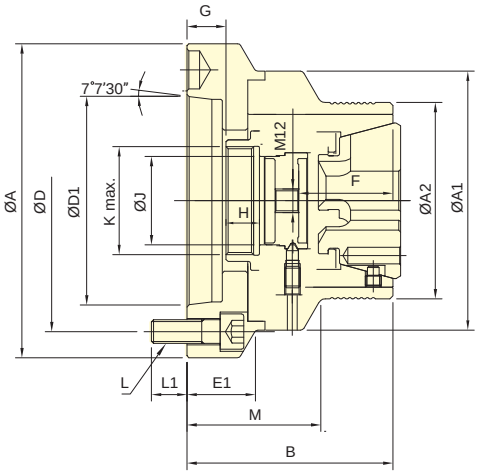

CBD-A

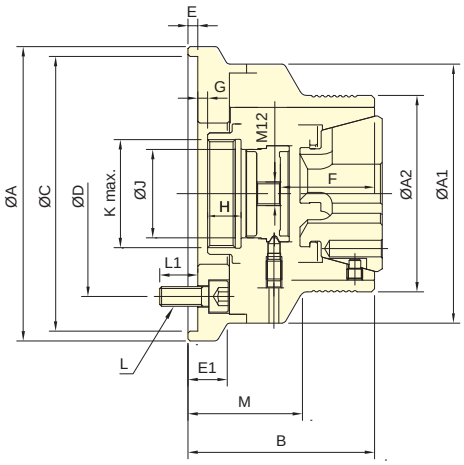

CBD

保留規格修改的權利
Subject to technical changes

技術規格 SPECIFICATIONS

型號 Model		套筒行程 Plunger stroke	最大夾持能力 Max. Chucking Capacity 圓棒 Round	六角材 Hexagom	方材 Square	容許最大入力 Max. D.B. pull	最大夾持力 Max. clamping force	最高迴轉數 Max. speed	重量 Weight	使用筒夾 Matching steel collet	適用迴轉缸 Matching Cyl.	最大使用壓力 Max. pressure
		mm	mm	mm	mm	kN (kgf)	kN (kgf)	min^{-1} (r.p.m.)	kg			MPa (kgf/cm^2)
CBD-52		4.5	4~52	7~36	7~45	39.2(4000)	92.1(9400)	7000	7.3	RG-52	TK-A853	3.0(30)
CBD-5212		4.5	4~52	7~36	7~45	39.2(4000)	92.1(9400)	7000	7.1	RG-52	TK-A853	3.0(30)
CBD-5217		4.5	4~52	7~36	7~45	39.2(4000)	92.1(9400)	7000	10.9	RG-52	TK-A853	3.0(30)
CBD-52	**A5**	4.5	4~52	7~36	7~45	39.2(4000)	92.1(9400)	7000	7.8	RG-52	TK-A853	3.0(30)
CBD-52	**A6**	4.5	4~52	7~36	7~45	39.2(4000)	92.1(9400)	7000	9.1	RG-52	TK-A853	3.0(30)
CBD-65		4.5	4~65	8~56	8~46	44.1(4500)	103(10500)	6000	8.6	RG-65	TS-866	2.7(27)
CBD-6514		4.5	4~65	8~56	8~46	44.1(4500)	103(10500)	6000	9.3	RG-65	TS-866	2.7(27)
CBD-65	**A5**	4.5	4~65	8~56	8~46	44.1(4500)	103(10500)	6000	10.8	RG-65	TS-866	2.7(27)
CBD-65	**A6**	4.5	4~65	8~56	8~46	44.1(4500)	103(10500)	6000	9.5	RG-65	TS-866	2.7(27)
CBD-65	**A8**	4.5	4~65	8~56	8~46	44.1(4500)	103(10500)	6000	9.5	RG-65	TS-866	2.7(27)

外型尺寸 DIMENSIONS

Model		A	A1	A2	B	C (H6)	D	D1	E	E1	F	G max.	G min.	H	J	K max.	L	L1	M
CBD-52		150	140	116	99	140	104.8	-	5	-	52	7	2.5	17	56	M60x2	4~M10x20	14.5	57
CBD-5212		140	140	116	99	120	100	-	5	-	52	7	2.5	17	56	M60x2	4~M10x20	14.5	57
CBD-5217		180	140	116	109	170	133.4	-	6	-	52	16	11.5	17	56	M60x2	4~M12x30	18	67
CBD-52	**A5**	140	140	116	109	-	104.8	82.56	-	-	52	22	17.5	17	56	M60x2	4~M10x30	16	67
CBD-52	**A6**	160	140	116	109	-	133.4	106.38	-	-	52	22	17.5	17	56	M60x2	4~M12x35	18	67
CBD-65		180	157	132	112	170	133.4	-	6	24	54	15.5	11	17.5	68	M75x2	4~M12x30	18	70
CBD-6514		157	157	132	114	140	104.8	-	6	-	54	17.5	13	17.5	68	M75x2	4~M10x30	18	72
CBD-65	**A5**	157	157	132	112	-	104.8	82.56	-	-	54	21.5	17	17.5	68	M75x2	4~M10x25	16	70
CBD-65	**A6**	157	157	132	110	-	133.4	106.38	-	-	54	19.5	15	17.5	68	M75x2	4~M12x35	18.5	68
CBD-65	**A8**	202	157	132	114	-	171.4	139.72	-	38	54	23.5	19	17.5	68	M75x2	4~M16x35	24	72

立置式後拉筒夾夾頭
STATIONARY DRAW COLLET CHUCK

- 適合鑽床、銑床或切削中心機使用。
- 高精度及高剛性結構。
- 不需要另外搭配立式油壓缸。
- 安裝容易，接上配管即可進行加工。
- 搭配RG系統橡膠筒夾，換模簡便快速。
- 提供側邊配管與底部油路板兩種供油模式。
- Build-in cylinder, ideal for drilling machines, milling machines and machining centers
- Work with AUTOGRIP's rubber collet(RG series), quick change and saving runtime.
- Two modes for the media supply: side-supply mode or baseplate-supply mode.

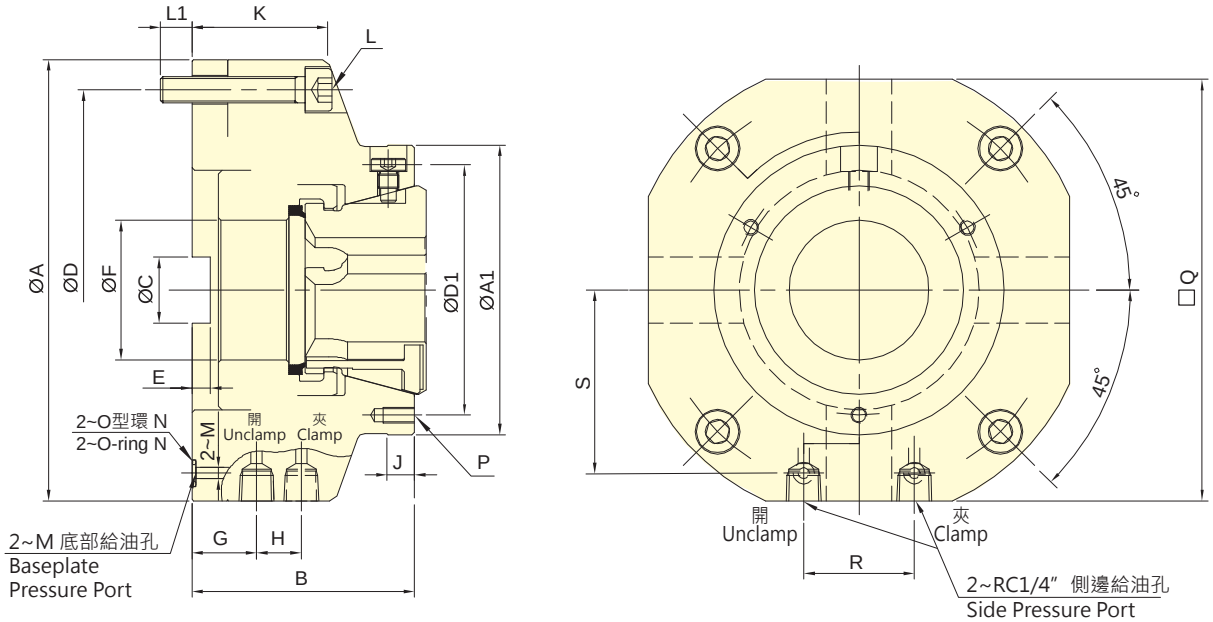

保留規格修改的權利
Subject to technical changes

技術規格 SPECIFICATIONS

型號	爪行程(直徑)	最大夾持能力 Max. Chucking Capacity			最大夾持力 Max. clamping force		最大使用壓力 Max. pressure		重量	使用筒夾
	Jaw stroke(Dia.)	圓棒 Round	六角材 Hexagom	方材 Square	氣壓 Pneumatic	油壓 Hydraulic	氣壓 Pneumatic	油壓 Hydraulic	Weight	Matching steel collet
Model	mm	mm	mm	mm	kN (kgf)	kN (kgf)	MPa (kgf/cm²)	MPa (kgf/cm²)	kg	
SCB-52	± 0.5	4~52	7~45	7~36	8.2(837)	101(10300)	0.6(6)	4.0(40)	8.6	RG-52
SCB-65	± 0.5	4~65	8~56	8~46	10(1020)	105(10700)	0.6(6)	4.2(42)	10.2	RG-65

外型尺寸 DIMENSIONS

Model	A (g6)	A1	B	C	D	D1	E	F	G	H
SCB-52	175	110	84.5	25	152	95	7	53	24.5	17
SCB-65	192	130	94	30	169	114	9	66	26.5	20

Model	J	K	L	L1	M	N	P	Q	R	S
SCB-52	10	51.5	4~M10	12	4.2	P7	3~M6x12	160	42	69.5
SCB-65	10	61.5	4~M10	12.5	4.2	P7	3~M6x12	175	50	77

橡膠筒夾
RUBBER GRIP COLLET

- 可用於前推式或後拉式設計的筒夾夾頭。
- 平順與接近全包覆夾持的特性，擁有更好的夾持力，且不容易傷害工件。
- 搭配單一對應工件尺寸。
- 單一規格夾持範圍可達±0.5mm。
- 更換快速方便。
- 防塵防屑設計。

- Rubber grip collet for push type or draw type collet chucks.
- Full griping area: high rigidity, more gripping force. Gripping smoothly: prevent to damage the workpiece.
- More accurate than standard spring collets. Accuracy: With customized rubber grip collet.
- Grip Range: ±0.5mm.
- Quick change and easy.
- Dust-proof and swarf-proof design.

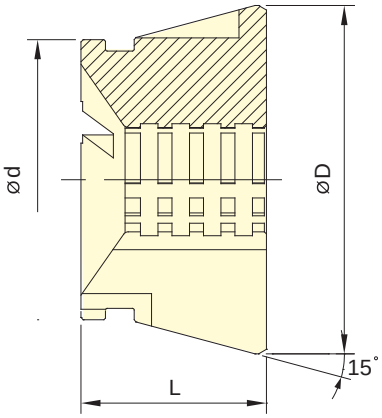

RG-RT

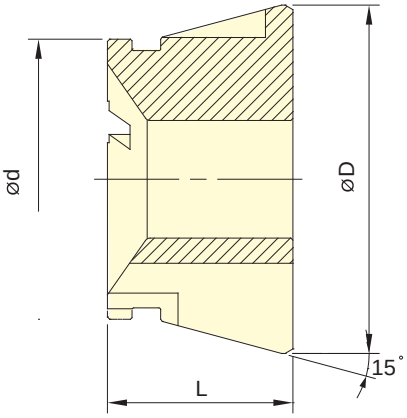

RG-R

技術規格 SPECIFICATIONS

型號 Model	最大夾持能力 Max. Chucking Capacity 圓棒 Round mm	d	D	L	適合筒夾夾頭 Matching Collect Chuck
RG-42R	4~42	54	79.3	42	CB-42, CBE-42
RG-42RT	11~42	54	79.3	42	CB-42, CBE-42
RG-52R	4~52	66	79.3	46	CB-52, CBD-52, CBE-52, SCB-52
RG-52RT	11~52	66	79.3	46	CB-52, CBD-52, CBE-52, SCB-52
RG-65R	4~65	80	99.5	53	CB-65, CBD-65, CBE-65, SCB-65
RG-65RT	11~65	80	99.5	53	CB-65, CBD-65, CBE-65, SCB-65

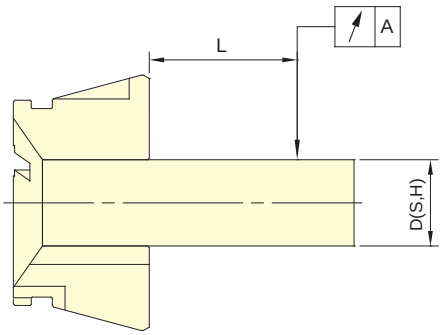

測棒 D(S,H) Test Bar D(S,H)	L mm	A DIN Class1	A DIN Class2
3.0~6.0	16	0.015	0.020
6.0~10.0	25	0.015	0.020
10.0~18.0	40	0.020	0.030
18.0~24.0	50	0.020	0.030
24.0~30.0	60	0.020	0.030
30.0~50.0	80	0.030	0.040
50.0~60.0	100	0.030	0.040

註 1：一般內筒夾精度為 DIN 二級
註 2：本公司橡膠筒夾以 DIN 一級為標準
Note1：Collets chuck are conformed to DIN 6343 Class2.
Note2：AUTOGRIP's rubber grip collets are conformed to DIN 6343 Class1.

中空立置式夾頭
STATIONARY CHUCK WITH THRU-HOLE

- 立置式中空動力夾頭，適合鑽床、銑床或切削中心機使用，有二爪及三爪兩種形式。
- VH2-2200型式所配對之夾頭規格及寸法與2H-2型式相同。
- VH2-3200型式所配對之夾頭規格及寸法與3H-2型式相同。
- Stationary Chuck with two or three jaws for drilling, milling and other machines.
- Specification and size of matching chuck for model VH2-2200 is the same as model 2H-2.
- Specification and size of matching chuck for model VH2-3200 is the same as model 3H-2.

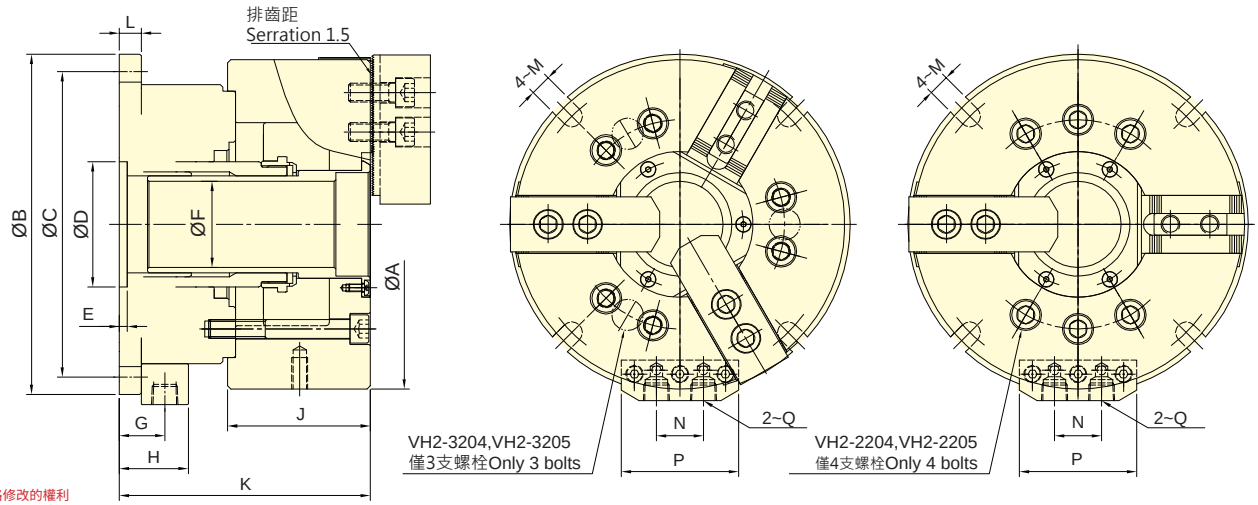

技術規格 SPECIFICATIONS

型號	活塞面積Eff. Piston area		爪行程(直徑)	最大使用壓力	重量
Model	押側Extend	拉側Retract	Jaw stroke(Dia.)	Max. pressure	Weight
	cm^2	cm^2	mm	MPa(kgf/cm^2)	kg
VH2-2204	52.4	46.7	5.5	2.0 (20)	9.5
VH2-3204	52.4	46.7	5.5	3.0 (30)	9.5
VH2-2205	63.7	57.9	5.5	2.0 (20)	13.1
VH2-3205	63.7	57.9	5.5	3.0 (30)	12.6
VH2-2206	97.1	88.5	6.0	1.8 (17.9)	21.5
VH2-3206	97.1	88.5	6.0	2.7 (26.8)	21.5
VH2-2208	128.9	113.6	7.6	2.1 (20.7)	32.9
VH2-3208	128.9	113.6	7.6	2.9 (28.6)	33.4
VH2-2210	189.2	174.3	8.9	1.9 (19.2)	55
VH2-3210	189.2	174.3	8.9	2.9 (28.7)	59

外型尺寸 DIMENSIONS

Model	A	B	C	D(H7)	E	F	G	H	J	K	L	M	N	P	Q
VH2-2204	113	155	137	50	5	27	23	34	59	122.5	12	9	26	62	RC1/4
VH2-3204	113	155	137	50	5	27	23	34	59	122.5	12	9	26	62	RC1/4
VH2-2205	138	168	150	60	5	32	23	34	60	125	12	9	26	62	RC1/4
VH2-3205	138	168	150	60	5	32	23	34	60	125	12	9	26	62	RC1/4
VH2-2206	170	194	176	80	5	45	25	36	81	143	14	11	26	62	RC1/4
VH2-3206	170	194	176	80	5	45	25	36	81	143	14	11	26	62	RC1/4
VH2-2208	210	217	195	80	5	55	29	44	91	160	14	13.5	30	75	RC3/8
VH2-3208	210	217	195	80	5	55	29	44	91	160	14	13.5	30	75	RC3/8
VH2-2210	260	266	246	100	6	76	32	47	102	192	17	13.5	30	75	RC3/8
VH2-3210	260	266	246	100	6	76	32	47	102	192	17	13.5	30	75	RC3/8

中實立置式夾頭
STATIONARY CHUCK

- 立置式中實動力夾頭，適合鑽床、銑床或切削中心機使用，有二爪及三爪兩種形式。
- VP-200型式所配對之夾頭規格及寸法與2P型式相同。
- VP-300型式所配對之夾頭規格及寸法與3P型式相同。
- Stationary Chuck with two or three jaws for drilling, milling and other machines.
- Specification and size of matching chuck for model VP-200 is the same as model 2P.
- Specification and size of matching chuck for model VP-300 is the same as model 3P.

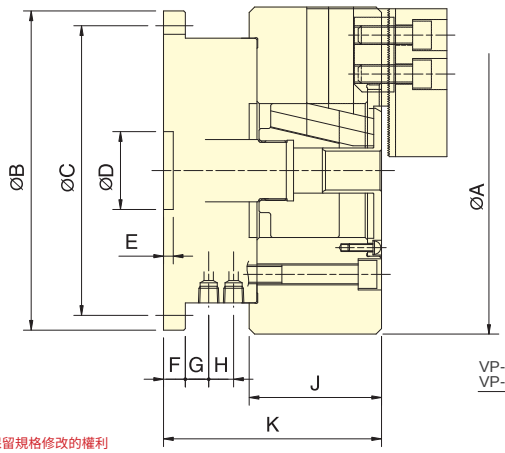

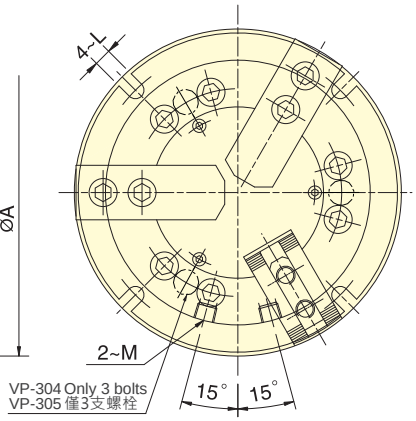

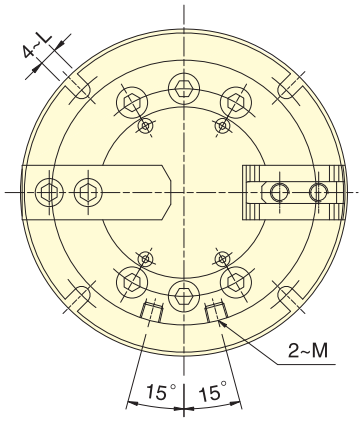

保留規格修改的權利
Subject to technical changes

技術規格 SPECIFICATIONS

型號	活塞面積Eff. Piston area		爪行程(直徑)	最大使用壓力	重量
Model	押側Extend	拉側Retract	Jaw stroke(Dia.)	Max. pressure	Weight
	cm^2	cm^2	mm	MPa(kgf/cm^2)	kg
VP-204	28.0	24.9	6.4	2.1(21)	7.1
VP-304	28.0	24.9	6.4	3.2(32)	7.4
VP-205	28.0	24.9	6.4	2.2(22)	10.2
VP-305	28.0	24.9	6.4	3.3(33)	10.6
VP-206	63.1	53.5	8.5	2.3(23)	18.3
VP-306	63.1	53.5	8.5	3.4(34)	19.8
VP-208	103.4	90.8	8.8	1.9(19)	31.6
VP-308	103.4	90.8	8.8	2.8(28)	33.6
VP-210	153.1	133.5	8.8	1.5(15)	52.8
VP-310	153.1	133.5	8.8	2.2(22)	54.5

外型尺寸 DIMENSIONS

Model	A	B	C	D(H8)	E	F	G	H	J	K	L	M
VP-204	110	146	130	30	4.5	12	18	2	52	92	9	RC1/4
VP-304	110	146	130	30	4.5	12	18	2	52	92	9	RC1/4
VP-205	135	146	130	30	4.5	12	18	2	55	95	9	RC1/4
VP-305	135	146	130	30	4.5	12	18	2	55	95	9	RC1/4
VP-206	165	178	160	40	5	12	14.5	12.5	74	125	11	RC1/4
VP-306	165	178	160	40	5	12	14.5	12.5	74	125	11	RC1/4
VP-208	210	205	186	40	5	14	15	16	85	140	11	RC1/4
VP-308	210	205	186	40	5	14	15	16	85	140	11	RC1/4
VP-210	254	248	225	50	6	17	20	18	89	176	13	RC3/8
VP-310	254	248	225	50	6	17	20	18	89	176	13	RC3/8

立置式長行程夾頭
LONG JAW STROKE STATIONARY CHUCK

- 楔形中實夾頭，長爪行程。
- 內建油壓缸，當使用氣壓做為動力源時，可選配保壓閥組件。
- 安裝容易，接上配管即可進行加工。
- 薄型輕量化設計，並可使用標準生爪或標準硬爪。
- 可配合氣密檢知，進行軸向位置確認。
- 單一潤滑油孔，集中潤滑。
- WEDGE-HOOK type power chuck, and long jaw stroke.
- Build-in hydraulic cylinder; it can also work with lock valve and be driven by air pressure.
- Easy to install. Installing the tubes and then operating.
- Thin and compact design. Use standard soft jaws or standard hard jaws.
- Air-tight pressure detect function is optional.

- 配備氣密檢知。
- Equipped with Airtight pressure detection function.

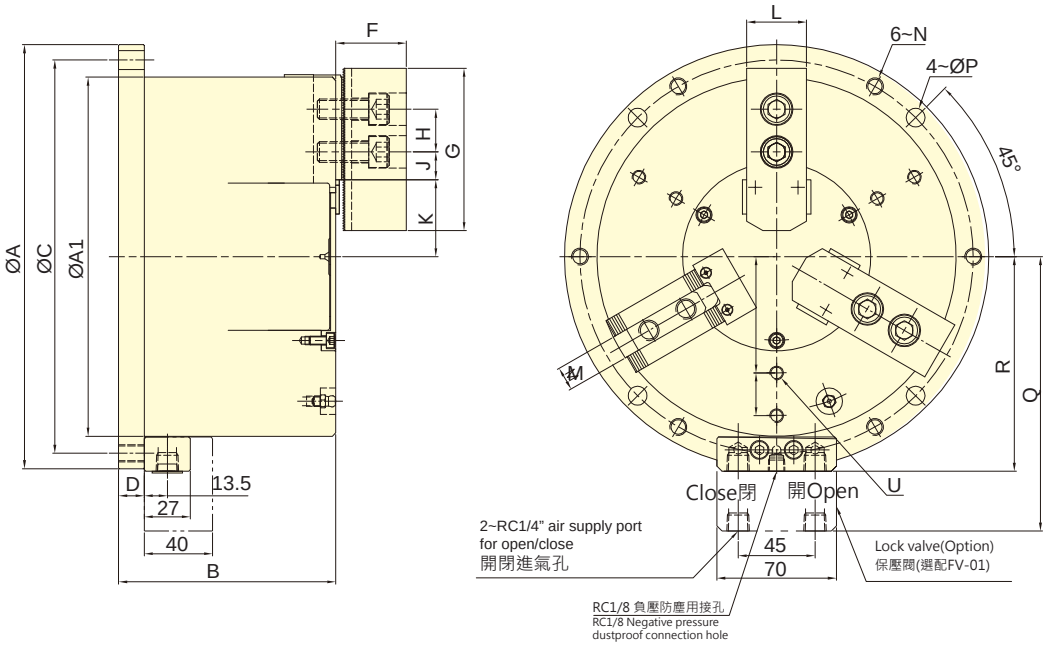

保留規格修改的權利
Subject to technical changes

技術規格 SPECIFICATIONS

型號	爪行程(直徑)	夾持直徑		最大夾持力		最大使用壓力		最低使用壓力	空氣消耗量	重量
		最大	最小	氣壓	油壓	氣壓	油壓		使用壓力6.0 kgf/cm²	
Model	Jaw stroke (Dia.)	Chucking Dia.		Max. clamping force		Max. pressure		Min. pressure	Air consumption	Weight
		Max.	Min.	Pneumatic	Hydraulic	Pneumatic	Hydraulic			
	mm	mm	mm	kN(kgf)	kN(kgf)	MPa(kgf/cm²)	MPa(kgf/cm²)	kgf/cm²	lit (at 6.0 kgf/cm²)	kg
SM-306	13.1	168	14	18.0(1830)	32.2(3280)	0.7(7)	1.2(12)	2	1.5	18.7
SM-308	16	210	18	26.2(2670)	45.0(4590)	0.7(7)	1.2(12)	2	2.7	32.5
SM-310	19.6	254	20	37.0(3772)	63.0(6422)	0.7(7)	1.2(12)	2	4.6	53.6

外型尺寸 DIMENSIONS

Model	A(h7)	A1	B	C	D	F	G	H	J max.	J min.
SM-306	206	168	110	188	15	40	73	20	16.75	4.75
SM-308	248	210	127	230	15	41	95	25	23.75	8.75
SM-310	300	254	145	280	16	46	110	30	36.75	14.25

Model	K max.	K min.	L	M	N	P	Q	R	S	T
SM-306	39	32.45	31	12	M10x1.5	11	139.5	104.5	55	18
SM-308	45	37	35	14	M10x1.5	11	160.5	125.5	68	25
SM-310	50	40.2	40	16	M12x1.75	13	182.5	147.5	85	30

立置式夾頭
STATIONARY CHUCK

- 立置式中實夾頭和立置式中空夾頭，有二爪及三爪兩種夾爪形式。
- 內建油壓缸，亦可選配保壓閥，支援氣壓驅動。
- 小通孔設計，適合加工較長棒材。
- 安裝簡便，接上配管即可開始作業。
- 輕薄設計，可搭配標準生爪或硬爪使用。
- 可結合立置夾頭座板進行多樣化加工應用。
- 適用於旋轉加工，可安裝於車銑複合加工機。
- Stationary Chucks – Non-Thru-Hole and Thru-Hole Types.
- Available in two jaw configurations: 2-jaw and 3-jaw.
- Equipped with a built-in hydraulic cylinder; compatible with lock valves and can also be operated using air pressure.
- Features a small thru-hole, making it ideal for machining long bar workpieces.
- Side and bottom air/hydraulic inlets available; either can be used for operation.
- Slim and compact design. Compatible with standard soft jaws or hard jaws.
- Suitable for rotary machining and can be installed on mill-turn machines.
- Can be integrated with multi-plate setups for enhanced versatility.

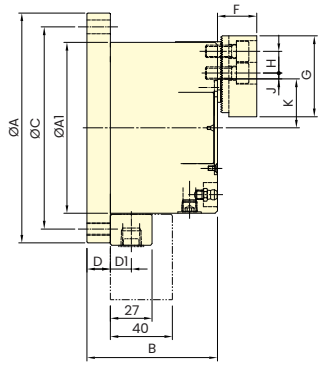

SP-304

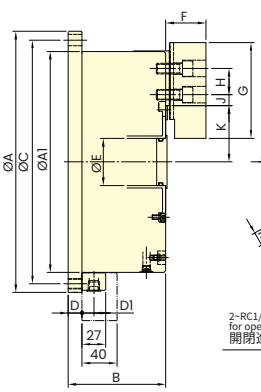

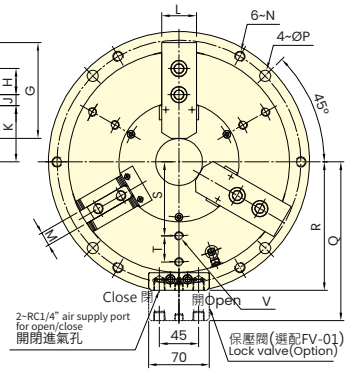

SP-306~SP-312

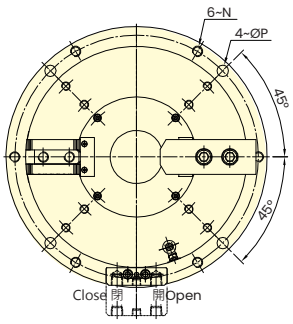

SP-206,SP-208,SP-210

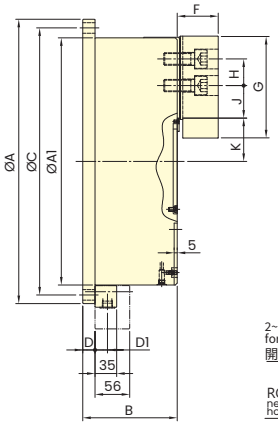

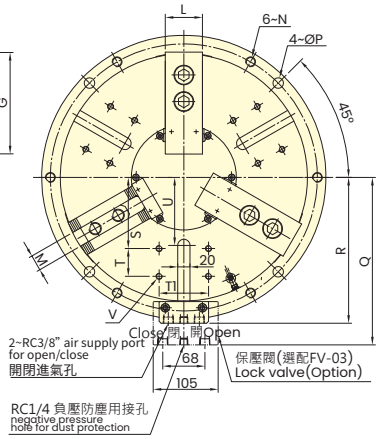

SP-316

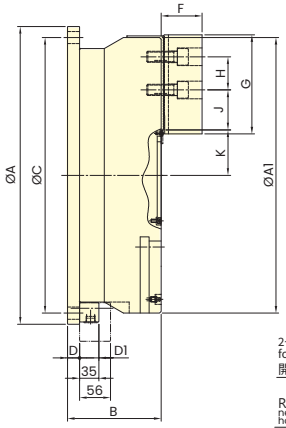

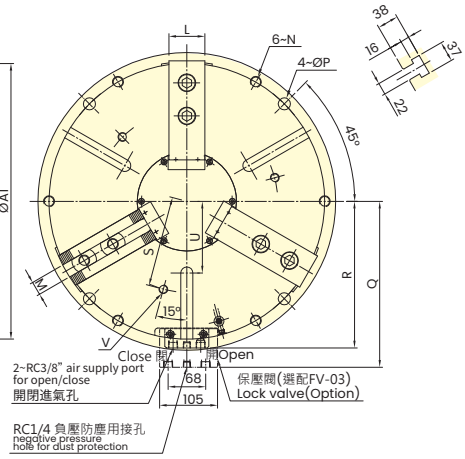

SP-320/SP-324

保留規格修改的權利
Subject to technical changes

技術規格 SPECIFICATIONS

型號	爪行程 (直徑)	夾持直徑		最大夾持力		最大使用壓力		最低使用壓力	空氣消耗量	重量
		最大	最小	氣壓	油壓	氣壓	油壓		使用壓力6.0 kgf/cm²	
Model	Jaw stroke (Dia.)	Chucking Dia.		Max. clamping force		Max. pressure		Min. pressure	Air consumption	Weight
		Max.	Min.	Pneumatic	Hydraulic	Pneumatic	Hydraulic			
	mm	mm	mm	kN(kgf)	kN(kgf)	MPa(kgf/cm²)	MPa(kgf/cm²)	kgf/cm²	lit (at 6.0 kgf/cm²)	kg
SP-304	5.1	110	10	7.5(765)	22.0(2243)	0.7(7)	1.2(12)	2	0.5	7
SP-206	5.5	168	30	34.1(3477)	46.1(4752)	0.7(7)	1.2(12)	2	1.4	16
SP-306	5.5	168	30	35.5(3620)	60.0(5252)	0.7(7)	1.2(12)	2	1.4	16.5
SP-208	6.8	210	42	43.2(4405)	74.0(7545)	0.7(7)	1.2(12)	2	2.5	27.7
SP-308	6.8	210	42	51.5(5251)	88.3(9004)	0.7(7)	1.2(12)	2	2.5	28.7

立置式夾頭
STATIONARY CHUCK

型號	爪行程 (直徑)	夾持直徑		最大夾持力		最大使用壓力		最低使用壓力	空氣消耗量	重量
		最大	最小	氣壓	油壓	氣壓	油壓		使用壓力6.0 kgf/cm²	
Model	Jaw stroke (Dia.)	Chucking Dia.		Max. clamping force		Max. pressure		Min. pressure	Air consumption	Weight
		Max.	Min.	Pneumatic	Hydraulic	Pneumatic	Hydraulic			
	mm	mm	mm	kN(kgf)	kN(kgf)	MPa(kgf/cm²)	MPa(kgf/cm²)	kgf/cm²	lit (at 6.0 kgf/cm²)	kg
SP-210	7	254	52	60.5(6169)	94.5(9636)	0.7(7)	1.2(12)	2	4.2	41.8
SP-310	7	254	52	68.2(6955)	118.7(12104)	0.7(7)	1.2(12)	2	4.2	42
SP-312	9.3	304	60	75.8(7729)	148 (15091)	0.7(7)	1.2(12)	2	6.4	71.3
SP-316	14.5	400	30	120.7(12305)	120.7(12305)	0.7(7)	0.7(7)	2	10.6	147.8
SP-320	16	500	45	155.6(15865)	155.6(15865)	0.7(7)	0.7(7)	2	15	232.7
SP-324	16	600	140	215.9(22015)	215.9(22015)	0.7(7)	0.7(7)	2	22	338.7

外型尺寸 DIMENSIONS

Model	A(h7)	A1	B	C	D	D1	E	F	G	H	J max.	J min.
SP-304	148	110	84	130	15	13.5	-	25	52	14	3.75	0.75
SP-206	206	168	94	188	15	13.5	25	40	73	20	10.75	4.75
SP-306	206	168	94	188	15	13.5	25	40	73	20	10.75	4.75
SP-208	248	210	108	230	15	13.5	32	41	95	25	12.25	8.75
SP-308	248	210	108	230	15	13.5	32	41	95	25	12.25	8.75
SP-210	300	254	112	280	16	13.5	54	46	110	30	23.25	12.75
SP-310	300	254	112	280	16	13.5	54	46	110	30	23.25	12.75
SP-312	350	304	130	330	18	13.5	65	54	130	30	30.75	12.75
SP-316	460	400	153	432	20	20	-	66	165	43	67.75	18.25
SP-320	540	500	170	500	22	20	-	74	180	60	87.5	24.5
SP-324	640	600	175	600	24	20	-	74	180	60	87.5	24.5

Model	K max.	K min.	L	M	N	P	Q	R	S	T	T1	U	V
SP-304	31.5	28.95	23	10	M8x1.25	9	110.5	75.5	-	-	-	-	-
SP-206	47	44.25	31	12	M10x1.5	11	139.5	104.5	55	18	-	-	6~M8x1.25
SP-306	47	44.25	31	12	M10x1.5	11	139.5	104.5	55	18	-	-	6~M8x1.25
SP-208	57	53.6	35	14	M10x1.5	11	160.5	125.5	68	25	-	-	6~M8x1.25
SP-308	57	53.6	35	14	M10x1.5	11	160.5	125.5	68	25	-	-	6~M8x1.25
SP-210	64.5	61	40	16	M12x1.75	13	182.5	147.5	85	30	-	-	6~M10x1.5
SP-310	64.5	61	40	16	M12x1.75	13	182.5	147.5	85	30	-	-	6~M10x1.5
SP-312	77.5	72.85	50	21	M12x1.75	13	207.5	172.5	100	35	-	-	6~M10x1.5
SP-316	70	62.75	60	25.5	M16x2.0	17.5	271	236	115	45	80	110	12~M10x1.5
SP-320	82.5	74.5	65	25	M20x2.5	22	301	266	165	-	-	130	3~M16x2.0
SP-324	129.5	121.5	65	25	M20x2.5	22	351	316	200	-	-	180	3~M16x2.0

立置式後拉夾頭
STATIONARY PULL DOWN CHUCK

- 內建油壓缸，當使用氣壓做為動力源時，可選配保壓閥組件。
- 可同時將工件做徑向夾持與軸向後拉，使工件不上浮並緊貼座金基準面。
- 高剛性硬化處理的本體與圓柱後拉機構，並經過軸孔精搪，確保高夾持精度與耐用度，適合重切削場合。
- 可與立置夾頭座板組合進行加工。
- Build-in hydraulic cylinder; it can also work with lock valve and be driven by air pressure.
- Radial clamp and axial pull down at the same time, keep the workpiece attaching close to the base surface of the chuck.
- Almost no workpiece uplifting displacement.
- The body with heat treatment and the organization of cylinder pull-down and fine boring, which guarantee to the high clamping precision and durableness, it's suitable for heavy duty machining.
- Can work together with multi-plate.

- 配備氣密檢知。
- Equipped with Airtight pressure detection function.

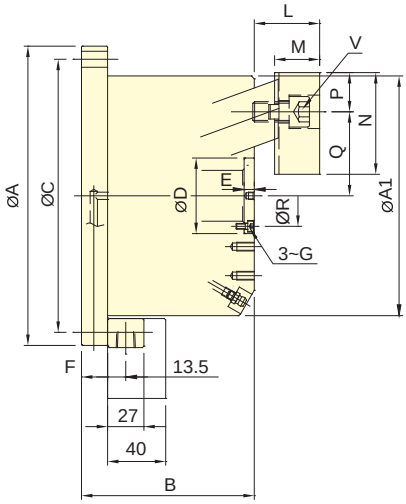

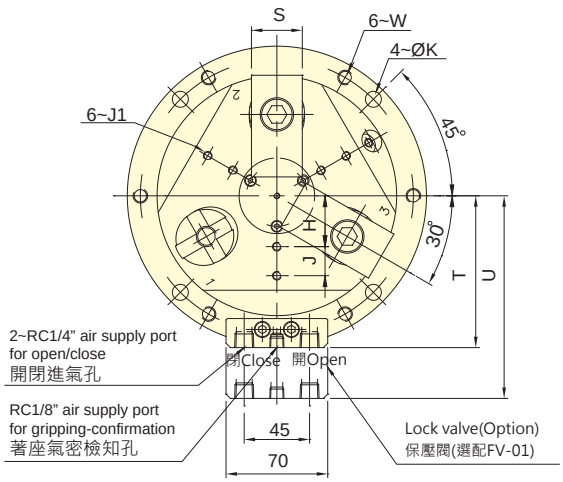

技術規格 SPECIFICATIONS

型號	爪行程 (直徑)	夾持直徑		最大夾持力		最大使用壓力		最低使用壓力	空氣消耗量	重量
		最大	最小	氣壓	油壓	氣壓	油壓		使用壓力6.0 kgf/cm²	
Model	Jaw stroke (Dia.)	Chucking Dia.		Max. clamping force		Max. pressure		Min. pressure	Air consumption	Weight
		Max.	Min.	Pneumatic	Hydraulic	Pneumatic	Hydraulic			
	mm	mm	mm	kN(kgf)	kN(kgf)	MPa(kgf/cm²)	MPa(kgf/cm²)	kgf/cm²	lit (at 6.0 kgf/cm²)	kg
SD-304	5	110	18	5.0 (510)	10.9 (1112)	0.6 (6)	1.3 (13)	2	0.26	8.1
SD-306	7.2	165	35	11.5 (1173)	25.0 (2550)	0.6 (6)	1.3 (13)	2	0.58	20.6
SD-308	7.2	210	28	21.7 (2213)	47.0 (4793)	0.6 (6)	1.3 (13)	2	1.02	34.1
SD-310	10.8	254	40	36.0(3680)	60.0(6118)	0.6 (6)	1.0 (10)	2	2.05	55

外型尺寸 DIMENSIONS

Model	A(h7)	A1	B	C	D(H7/h7)	E	F	G	H	J	J1	K	L max.	L min.
SD-304	148	110	93.5	130	35	2	15	M3	22.5	10	M5x0.8	9	30	23
SD-306	206	165	116	188	52	7	18	M4	35	20	M6x1	11	45	35
SD-308	248	210	122	230	65	10	18	M5	45	25	M8x1.2	11	56	46
SD-310	300	254	151	280	75	12	20	M6	55	30	M8x1.2	13	65	50

Model	M	N	P	Q max.	Q min.	R	S	T	U	V	W
SD-304	19.5	52	19	37	34.5	27	25	75.5	110.5	3~M10	M8x1.25
SD-306	31	70	27	57.8	54.2	42	35	104.5	139.5	3~M14	M10x1.5
SD-308	41	84	31	70.8	67.2	53	40	125.5	160.5	6~M12	M10x1.5
SD-310	46	100	38	85	79.6	62	50	147.5	182.5	6~M14	M12x1.75

立置式爪背托後拉夾頭
STATIONARY PULL LOCK CHUCK

- 內建油壓缸，當使用氣壓做為動力源時，可選配保壓閥組件。
- 立置式夾頭可同時將工件做徑向夾持與軸向後拉，使工件不上浮並緊貼座金基準面。適合鑽床、銑床或切削中心機使用。
- 高剛性硬化處理的本體與圓柱後拉機構，並經過軸孔精搪，確保高夾持精度與耐用度，適合重切削場合。
- 可與立置夾頭座板組合進行加工。
- Build-in hydraulic cylinder; it can also work with lock valve and be driven by air pressure.
- Radial clamp and axial pull down at the same time, keep the workpiece attaching close to the base surface of the chuck.
- Almost no workpiece uplifting displacement.
- Suitable for drilling, milling and other machines.
- The body with heat treatment and the organization of cylinder pull-down and fine boring, which guarantee to the high clamping precision and durableness, it's suitable for heavy duty machining.
- Can work together with multi-plate.

- 配備氣密檢知。
- Equipped with Airtight pressure detection function.

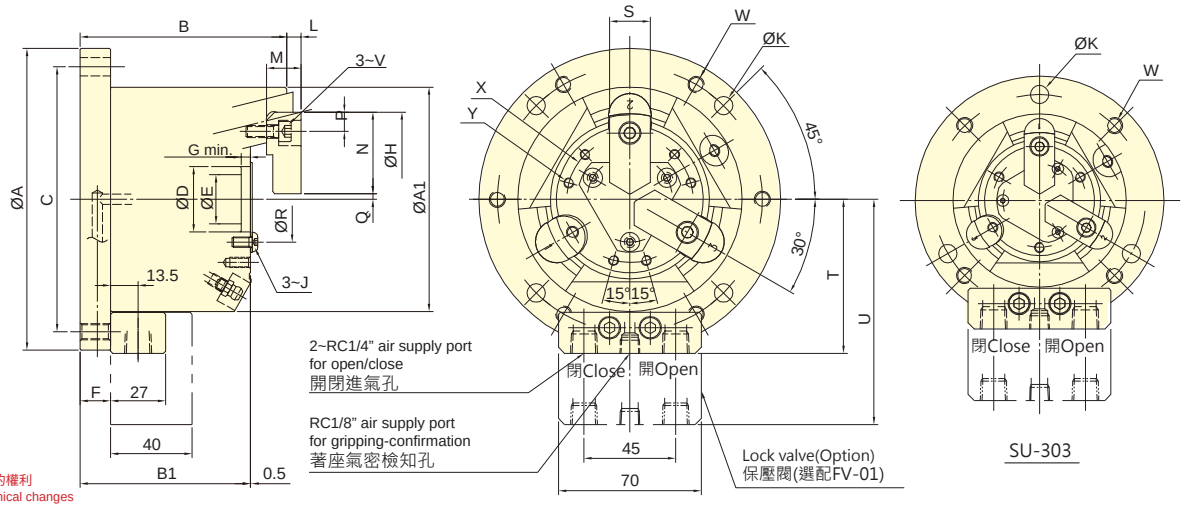

保留規格修改的權利
Subject to technical changes

技術規格 SPECIFICATIONS

型號	爪行程 (直徑)	夾持直徑		最大夾持力		最大使用壓力		最低使用壓力	空氣消耗量	重量
		最大	最小	氣壓	油壓	氣壓	油壓		使用壓力6.0 kgf/cm²	
Model	Jaw stroke (Dia.)	Chucking Dia.		Max. clamping force		Max. pressure		Min. pressure	Air consumption	Weight
		Max.	Min.	Pneumatic	Hydraulic	Pneumatic	Hydraulic			
	mm	mm	mm	kN(kgf)	kN(kgf)	MPa(kgf/cm²)	MPa(kgf/cm²)	kgf/cm²	lit (at 6.0 kgf/cm²)	kg
SU-303	2	42	4	5.2(530)	12.8(1305)	0.6(6)	1.3(13)	2	0.16	5.7
SU-304	3	60	5	6.7 (683)	16.0 (1632)	0.6 (6)	1.3 (13)	2	0.26	7.4
SU-306	5	105	31	18.5 (1886)	40.0 (4079)	0.6 (6)	1.3 (13)	2	0.58	18
SU-308	5	132	32	37.0 (3773)	80.0 (8158)	0.6 (6)	1.3 (13)	2	1.02	31.5
SU-310	5	163	44	46.2(4710)	100.0(10100)	0.6(6)	1.3(13)	2	2.11	53

外型尺寸 DIMENSIONS

Model	A(h7)	A1	B	B1	C	D(H6)	E	F	G	H(H6)	J	K	L max.	L min.
SU-303	122	85	80.5	68	104	28	22	12	3.5	66	M3	3~9	5	1
SU-304	148	110	101.5	83.5	130	32	24	15	4.5	84	M5	4~9	7	1
SU-306	206	168	136.5	104	188	35	25	18	6	129	M5	4~11	15	5
SU-308	248	210	152	115	230	55	45	18	7	156	M6	4~11	17	7
SU-310	300	254	181	131	280	65	53	20	7	187	M8	4~13	9	-1

Model	M	N	P	Q max.	Q min.	R	S	T	U	V	W	X (p.c.d)	Y
SU-303	12	30	7	3.5	2.5	36	15	63	98	M5	4~M8x1.25	46	3~M5x10
SU-304	17	40	9.5	2.75	1.25	42	20	75.5	110.5	M6	6~M8x1.25	62	6~M5x10
SU-306	30	50	17	15.75	13.25	49	30	104.5	139.5	M10	6~M10x1.5	72	6~M6x12
SU-308	34	63	20.5	16.25	13.75	71	35	125.5	160.5	M12	6~M10x1.5	95	6~M6x12
SU-310	39	74	23	20.75	18.25	85	40	147.5	182.5	M14	6~M12x1.75	115	6~M6x12

立置式內張後拉夾頭
STATIONARY EXPANSIBLE PULL BACK CHUCK

- 內建油壓缸，當使用氣壓做為動力源時，可選配保壓閥組件。
- 適用於內徑夾持。
- 高精度安定性，適合最後製程加工。
- 可與立置夾頭座板組合進行加工。
- Build-in hydraulic cylinder; it can also work with lock valve and be driven by air pressure.
- For internal gripping.
- With high precision and stability.
- Suitable for the precision large length size process.
- Suitable for end process.
- Can work together with multi-plate.

- 氣密檢知 (選配)。
- Airtight pressure detect function is optional.

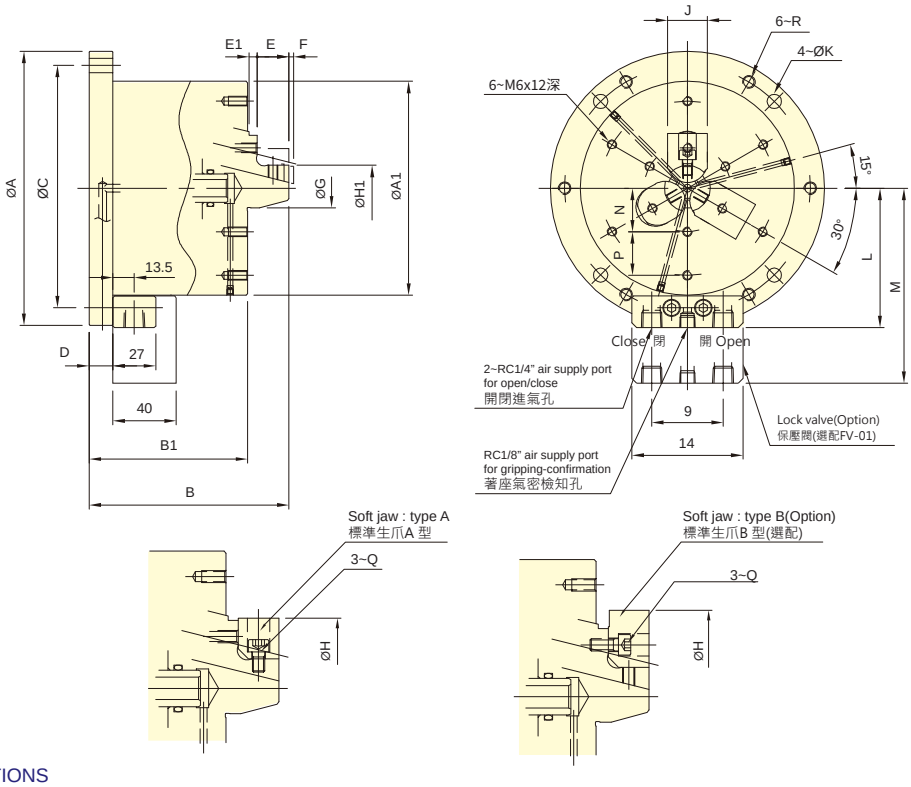

保留規格修改的權利
Subject to technical changes

技術規格 SPECIFICATIONS

型號	爪行程 (直徑)	夾持直徑		最大夾持力		最大使用壓力		最低使用壓力	空氣消耗量	重量
		最大	最小	氣壓	油壓	氣壓	油壓		使用壓力6.0 kgf/cm²	
Model	Jaw stroke (Dia.)	Chucking Dia.		Max. clamping force		Max. pressure		Min. pressure	Air consumption	Weight
		Max.	Min.	Pneumatic	Hydraulic	Pneumatic	Hydraulic			
	mm	mm	mm	kN(kgf)	kN(kgf)	MPa(kgf/cm²)	MPa(kgf/cm²)	kgf/cm²	lit (at 6.0 kgf/cm²)	kg
SE-305	3	83	29	14.3 (1459)	41.0 (4181)	0.7 (7)	1.3 (13)	2	0.46	14.6
SE-306	5	110	44	20.0 (2040)	57.0 (5812)	0.7 (7)	1.3 (13)	2	0.58	20
SE-308	5	150	50	32.0 (3263)	78.0 (7954)	0.7 (7)	1.3 (13)	2	1.02	33

外型尺寸 DIMENSIONS

Model	A(h7)	A1	B	B1	C	D	E	E1	F max.	F min.	G	type A		type B	
												H max.	H min.	H max.	H min.
SE-305	173	135	126	100	155	15	20	5	3	-3	25	68	50	83	67
SE-306	206	168	140	108	188	18	23	7	5	-5	40	90	70	110	89
SE-308	248	210	164	119	230	18	30	9	5	-5	49	110	90	150	108

Model	H1		J	K	L	M	N	P	Q	R
	max.	min.								
SE-305	50	29	25	9	88	123	27.5	27.5	3~M6	M8x1.25
SE-306	70	44	31	11	104.5	139.5	38	29	3~M6	M10x1.5
SE-308	90	50	35	11	125.5	160.5	50	35	3~M8	M10x1.5

MP4 立置夾頭座板
STATIONARY CHUCK BASE PLATE

- 可用於銑床或加工中心機上，同時加工多個工件。
- 可選擇安裝立式氣缸用保壓閥。
- 可訂製2、3、6工件數的盤面。
- Use for milling machine or machining center to achieve simultaneous processing of multiple workpieces.
- Stationary cylinder lock valve (optional) can be mounted.
- Plate for 2,3,6 stationary chucks is optional.

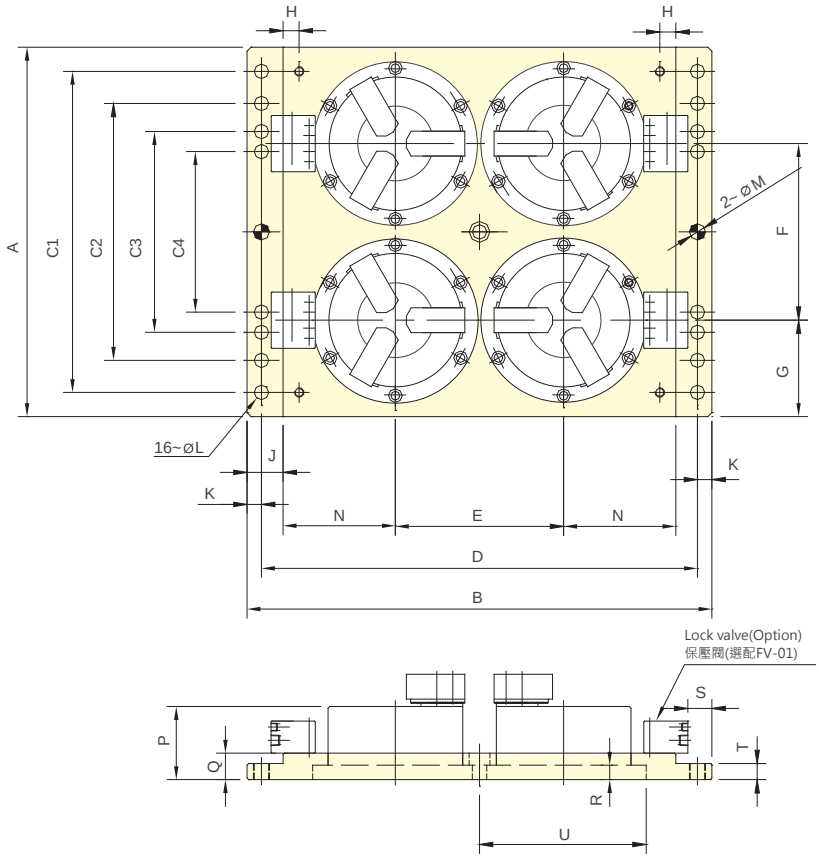

保留規格修改的權利
Subject to technical changes

外型尺寸 DIMENSIONS

Model	A	B	C1	C2	C3	C4	D	E	F	G
MP4-06206	460	580	400	320	250	200	544	210	220	120

Model	H	J	K	L	M	N	P	Q	R	S	T	U
MP4-06206	20	45	18	17	20	140	*B	33	18	20	20	206

*B 對照所裝配夾頭型號之寸法 B。
The dimension *B: Please refer to the dimension B of the chuck model assembled.

VH-201 手動切換閥
HAND OPERATED AIR VALVE

保留規格修改的權利
Subject to technical changes

最大容許壓力	操作角度	持續口徑
Max. pressure MPa(kgf/cm²)	Operating angle	Port size
1.0 (10)	90 °	Rc1/4

RAP 轉盤用氣壓三爪夾頭
PNEUMATIC ROTARY CHUCK

- 內建氣缸之薄型迴盤夾頭，所佔空間小，適合輕切削場合，並可使用標準生爪或標準硬爪。
- 適用於分度盤上進行分度加工。
- 迷宮環防塵機構設計，加工中切屑不易進入夾頭內。
- 摺動面均經硬化及精密研磨，並直接潤滑。
- Rotary chuck with built-in pneumatic cylinder, compact design, suitable for light machining, compatible to standard soft jaw/hard jaw.
- Can be installed on a rotary table for indexing machining.
- Sealed against dust and cutting chips.
- Matching surfaces of all parts hardened, ground and lubricated directly.

■ 注意：由於固定配氣環與夾頭本體之間旋轉摩擦，第四軸分度盤的旋轉扭矩必須高於下表所示。

■ Note: To overcome friction force between distubritor ring and chuck body, the rotating torque of rotary table must be highr than the requirement shown in the table.

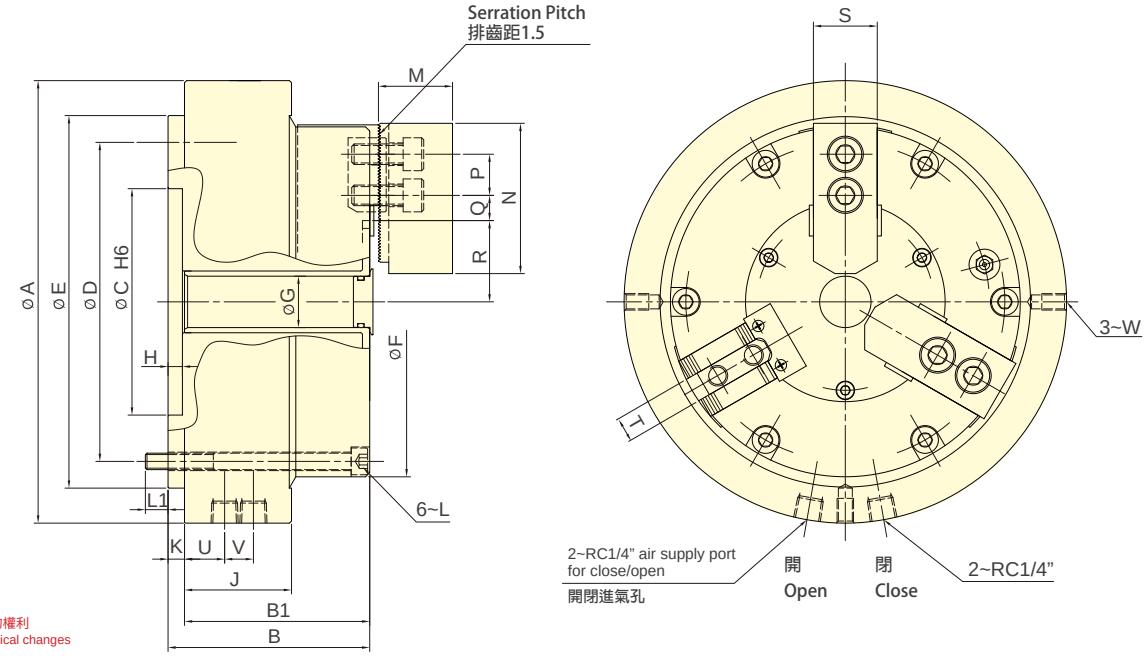

保留規格修改的權利
Subject to technical changes

技術規格 SPECIFICATIONS

型號 Model	爪行程 (直徑) Jaw stroke (Dia.)	夾持直徑 Chucking Dia. 最大 Max.	夾持直徑 Chucking Dia. 最小 Min.	最大夾持力 氣壓(使用壓力6.0 kgf/cm²) Max. clamping force Pneumatic(at 6.0kgf/cm²)	最大使用壓力 Max. pressure	最高轉速 Max. speed	旋轉扭矩 Max Rotation resistance torque	空氣消耗量 (使用壓力6.0 kgf/cm²) Air consumption (at 6.0 kgf/cm²)	重量 Weight
	mm	mm	mm	kN (kgf)	(kgf/cm²)	(r.p.m.)	Nm	lit (kgf/cm²)	kg
RAP-306	5.5	170	25	21.0 (2141.4)	7	72	40	3.1	16.2
RAP-308	6.8	215	37	34.2 (3487.4)	7	60	60	3.1	30.6
RAP-310	7	254	53	48.0 (4894.7)	7	53	85	4.2	42.4

外型尺寸 DIMENSIONS

Model	A	B	B1	C (H6)	D	E	F	G	H	J	K
RAP-306	215	98	90	110	155	181	170	25	7	52	8
RAP-308	260	113	104	110	200	226	215	32	8	52	9
RAP-310	300	117	52	140	235	261	254	54	8	52	10

Model	L	L1	M	N	P	Q max.	Q min.	R max.	R min.	S	T	U	V	W
RAP-306	6~M8	11	36	73	20	10.75	6.25	47	44.25	31	12	19.5	14	3~M8
RAP-308	6~M8	16	37	95	25	13.25	8.75	57	53.6	35	14	19.5	14	3~M8
RAP-310	6~M8	14	42	110	30	23.25	12.75	64.5	61	40	16	19.5	14	3~M8

薄型手動求心三爪夾頭
SELF-CENTERING 3-JAW MANUAL CHUCK

- 薄型與輕量化設計專用於五軸分度盤與銑削加工機，可充分增加作業空間。
- 中心孔防塵蓋設計，使切屑不易進入夾盤內部，以確保夾盤的使用壽命及精度。

- Thin and lightweight design and increase the z-axis machining range.
- With the center hole cover and dustproof design for the accuracy and service life of the chuck.
- For 5-axis indexing plates and milling machines.

- 本系列產品並不可直接安裝於臥式或立式車床，除非能提供足夠強度與剛性之背板給予支撐。
- 3MF series are not designed for the vertical or horizontal lathes, unless there is a rigid plate and providing adequate support rigidity and strength.

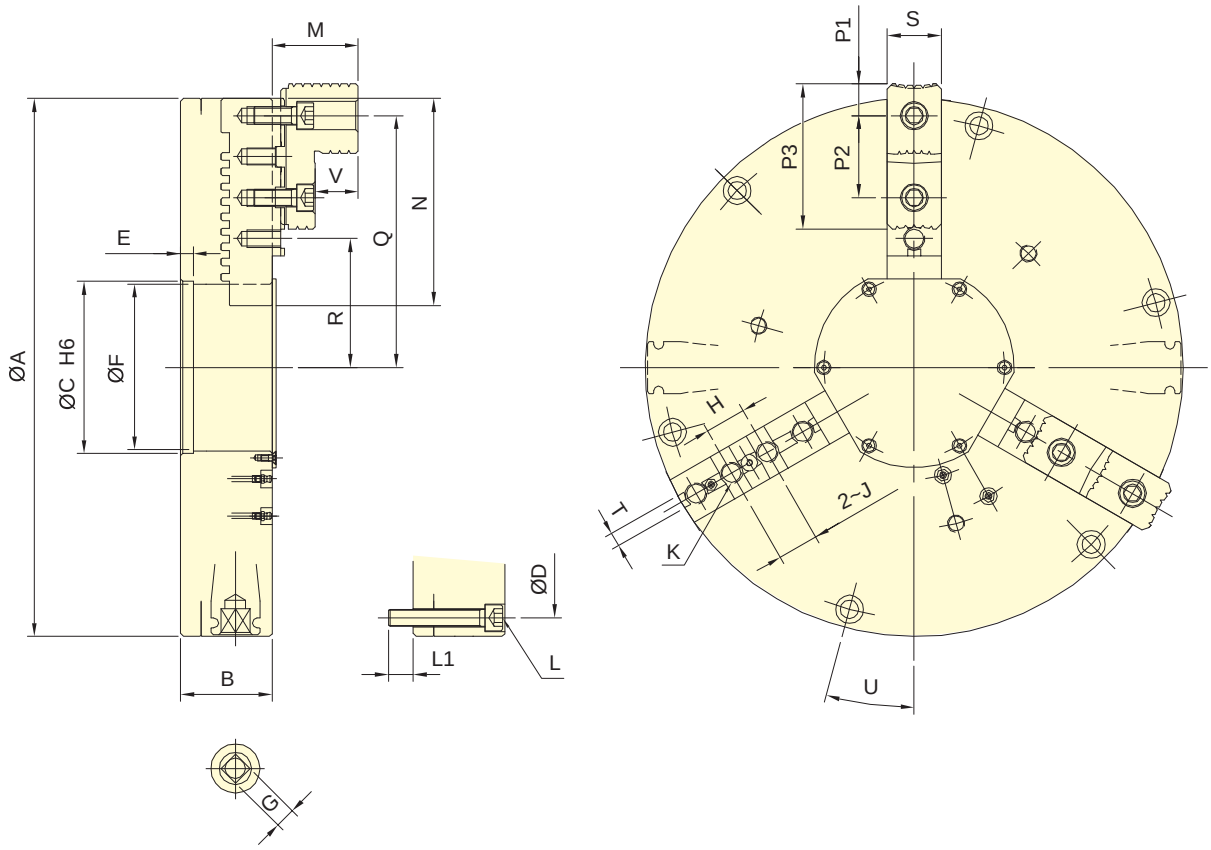

保留規格修改的權利
Subject to technical changes

技術規格 SPECIFICATIONS

型號	爪行程(直徑)	夾持 直徑 Chucking Dia.		最大容許扭矩	最大夾持力	最高迴轉數	重量
Model	Jaw stroke (Dia.)	最大 Max.	最小 Min.	Max. allowable torque	Max. clamping force	Max. speed	Weight
	mm	mm	mm	N · m (kgf · m)	kN (kgf)	min^{-1} (r.p.m.)	kg
3MF-16	60	350	95	175 (17.8)	59 (6000)	1450	66.9
3MF-20	80	450	135	170 (17.3)	71.2 (7300)	1150	121

外型尺寸 DIMENSIONS

Model	A	B	C (H6)	D	E	F	G	H	J (H7)	K	L	L1	M
3MF-16	400	80	140	375	10	135	□ 14	27	19.03	4~M12	6~M12	23	60
3MF-20	500	85	170	465	12	160	□ 19	38.1	19.03	4~M16	6~M16	23	80

Model	N	P1	P2	P3	Q max.	Q min.	R max.	R min.	S	T (h8)	U	V
3MF-16	148.5	27.16	54	112.5	184.5	164	103	62	40	12.7	15°	28
3MF-20	192.5	29.5	76.2	135	254	214	139.7	99.7	50	12.7	15°	40

動力定心虎鉗
POWER CENTERING VISE

- 外型薄、短，有效提升作業空間利用。
- 內建油壓缸，可使用氣壓或油壓作動。
- 側面與底部皆設輸入源介面，可依需求選擇連接。
- 適用於銑床與加工中心機。

- Slim and short profile for improved workspace utilization.
- Built-in hydraulic cylinder operable by either pneumatic or hydraulic pressure.
- Input ports available on both the side and bottom for flexible connection options.
- Suitable for milling machines and machining centers.

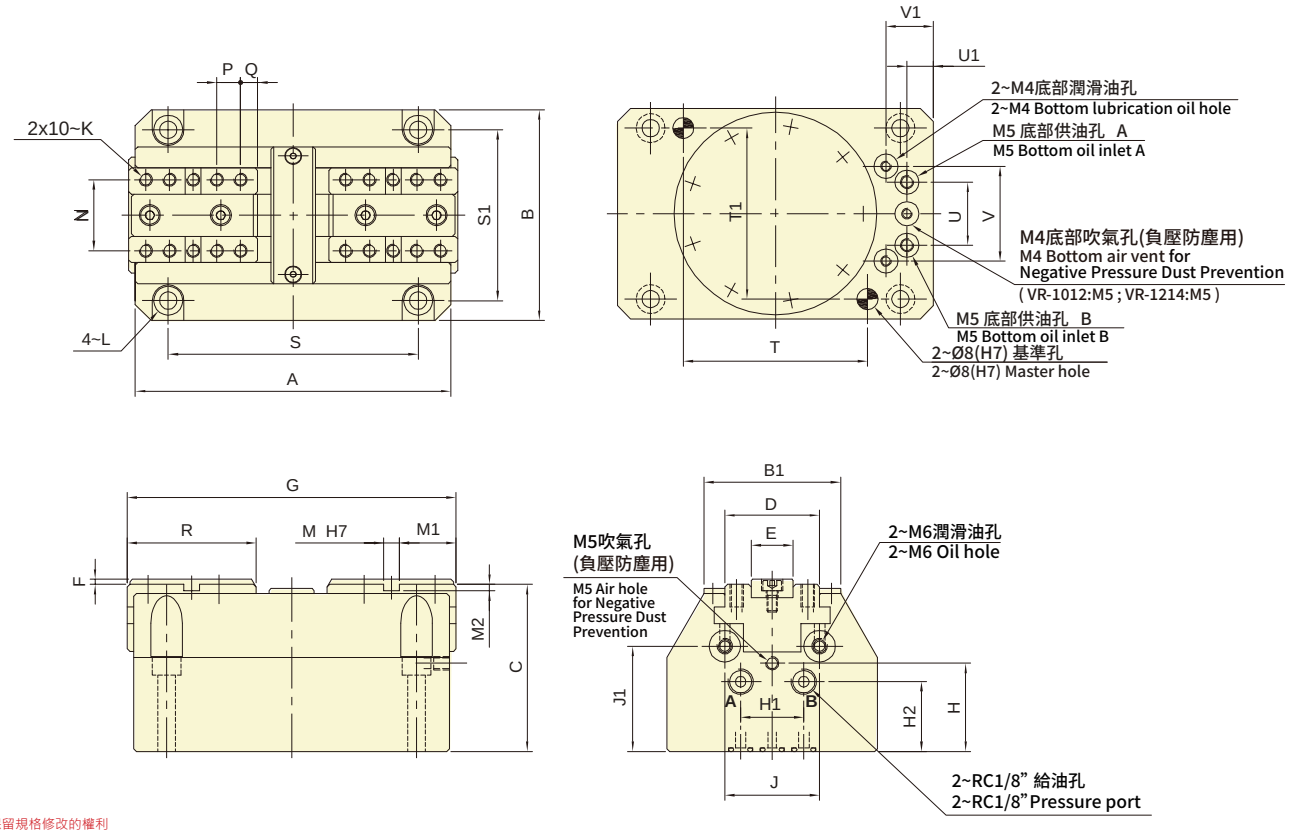

保留規格修改的權利
Subject to technical changes

技術規格 SPECIFICATIONS

型號	爪行程(直徑)	最大夾持直徑	最大夾持力 Max. clamping force		最大使用壓力 Max. pressure		夾爪最大高度	重量
Model	Jaw stroke (Dia.)	Max.Chucking (Dia.)	氣壓 Pneumatic	油壓 Hydraulic	氣壓 Pneumatic	油壓 Hydraulic	Max. Jaw Height	Weight
	mm	mm	kN (kgf)	kN (kgf)	MPa(kgf/cm²)	MPa(kgf/cm²)	mm	kg
VR-808	8	100	2.0(200)	7.7(785)	0.9(9)	2.1(21)	60	3.55
VR-1012	12	120	4.4(448)	12.2(1244)	0.9(9)	2.1(21)	60	7
VR-1214	14	160	8.6(876)	31.1(3171)	0.9(9)	2.1(21)	60	12

外型尺寸 DIMENSIONS

Model	A	B	B1	C	D	E(h6)	F	Gmax	Gmin	H	H1	H2	J	J1	K
VR-808	120	80	52	63.5	36	16	2	125	117	33.5	24	26.5	36	40	M5x0.8
VR-1012	150	100	64	76	45	20	2	158	146	39	30	32	46	48	M6x1
VR-1214	188	125	82	82.5	60	24	2.5	196	182	41.5	44	34.5	57	51	M8x1.25

Model	L	M(H7)	M1	M2	N	P	Q	R	S	S1	T	T1	U	U1	V	V1
VR-808	M6	6	21.5	2.5	27	9	6.5	49	95	65	70	65	24	10	36	18
VR-1012	M8	8	27	2.5	32	12	8	63	120	80	90	80	30	12	46	20
VR-1214	M8	8	30	3	43	12	10	80	158	100	128	100	44	16	57	25

MVSC

五軸求心虎鉗
5-AXIS SELF CENTERING VISE

- 自動定心設計，適用於 4 軸與 5 軸 CNC 旋轉工作台，可搭配臥式或立式加工機使用。
- 高重複定位精度，中心重複定位精度達 ±0.01 mm，確保工件精準夾持與穩定加工。
- 高剛性耐用結構，本體採高品質合金鋼製成，滑動面經高頻熱處理（HRC 45 以上），具優異耐磨性與穩定性。
- 全鋼熱處理鉗口，鉗口材質為全鋼並熱處理至 HRC 55 以上，設計可正反兩用，並可互換，大幅提升使用壽命。
- 適用多種加工環境，結構精密、操作簡便，適合高效率、高精度的加工應用。

- Self-centering design ideal for 4-axis and 5-axis CNC rotary tables; compatible with horizontal and vertical machining.
- Centering repeatability of ± 0.01 mm ensures precise and stable workpiece positioning.
- Vise body made of high-grade alloy steel with hardened sliding surfaces (HRC 45+) for excellent wear resistance and rigidity.
- Jaws are made of fully hardened steel (HRC 55+), reversible and interchangeable for extended service life.
- Precision-built and easy to operate, ideal for demanding machining environments requiring high efficiency and accuracy.

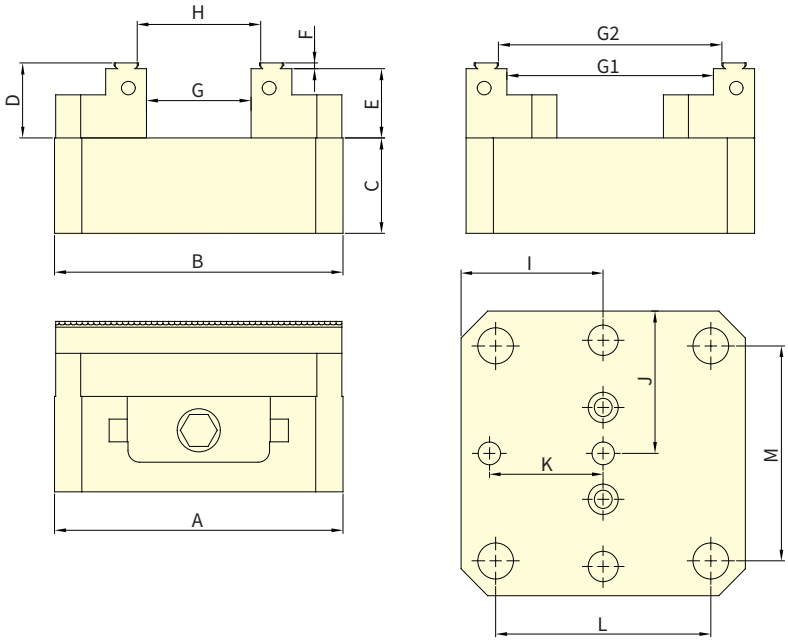

夾持曲線圖(Clamping curve)

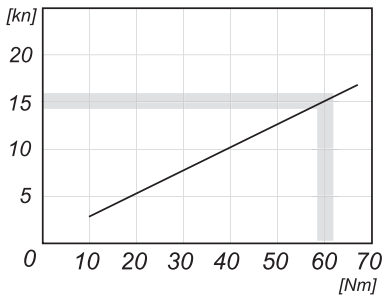

保留規格修改的權利
Subject to technical changes

外型尺寸 DIMENSIONS

Model	A	B	C	D	E	F	G	G1	G2	H	I	J	K	L	M
MVSC-764	76	102	35	21	18.5	2.5	45	78	82	49	51	38	30	52	52
MVSC-1275	127	127	42	33	30	2.5	47	91	96	52	63.5	63.5	50.8	96	96
MVSC-1276	127	153	42	33	30	2.5	73	117	122	78	76.5	63.5	50.8	96	96
MVSC-1278	127	210	42	33	30	2.5	130	167	172	135	105.5	63.5	50.8	96	96
MVSC-12710	127	255	42	33	30	2.5	175	219	226	180	127.5	63.5	50.8	96	96
MVSC-15010	150	255	57	37	34	2.5	143	207	212	148	127.5	75	100	96	96

MC 精密油壓虎鉗
MC HYDRAULIC VISE

- 虎鉗床身與活動鉗口一體鑄造，一體鑄造結構提供卓越剛性與穩定性，適合高精度加工。
- 下壓式「半球段」機構，有效消除鉗口浮動與工件傾斜，特殊機構設計夾持時產生下壓力道，提升定位精度並延長鉗口壽命。
- 高強度球墨鑄鐵主體（FCD60，相當於 GGG60），主體採用抗拉強度 60 kgf/mm²（約 80,000 psi）之球墨鑄鐵，強固耐用，適用於重切削環境。
- 滑動面火焰硬化至 HRC 45°，提升耐磨性與使用壽命，強化滑動表面硬度，確保虎鉗長時間操作下仍保持精度穩定。

- One-piece casting of the vise bed and movable jaw offers outstanding rigidity and stability, ideal for precision machining.
- The down-thrust spherical segment mechanism applies downward clamping force to eliminate jaw lifting and workpiece tilting, enhancing positioning accuracy and jaw longevity.
- The body is made of high-tensile ductile iron FCD60 (equivalent to GGG60), offering durability and strength for heavy-duty machining.
- Slideways are flame-hardened to HRC 45 ° for excellent wear resistance, maintaining long-term accuracy during extended use.

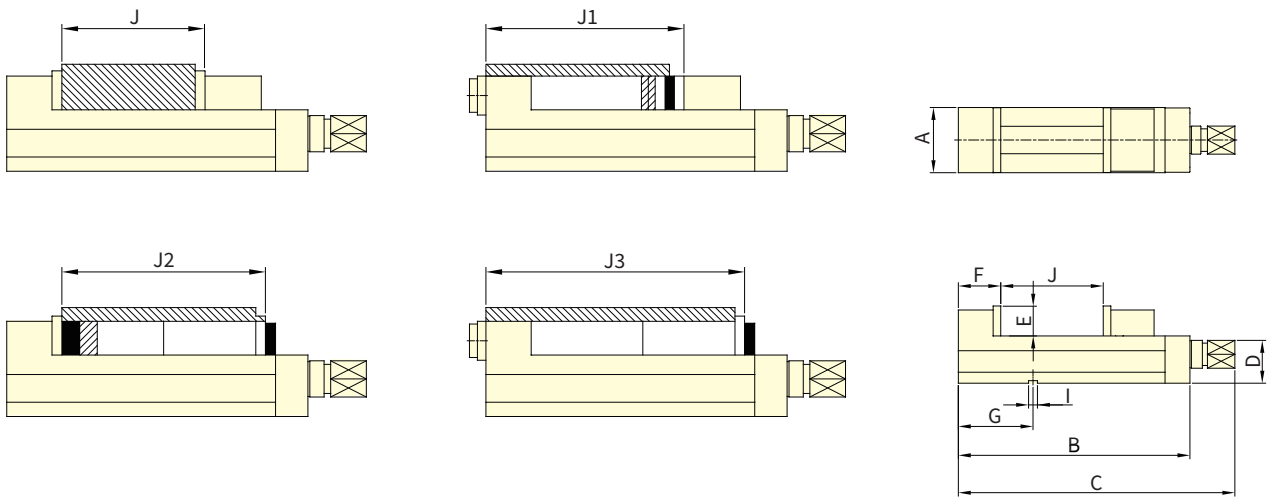

保留規格修改的權利
Subject to technical changes

外型尺寸 DIMENSIONS

MODEL	A	B	C	D	E	F	G	I	鉗口張開度（最大）Jaw Opening(Max.)				夾持力 Clamping Force (kgf)	重量 Weight (kgs)
									J	J1	J2	J3		
MVRH-100V	101	380	480	85	48	80	125	16	135	200	240	330	4000	27
MVRH-130V	131	445	545	95	55	85	150	18	190	250	300	390	5000	40
MVRH-160V	161	535	635	105	58	100	165	18	250	330	370	480	5500	58
MVRH-160VL	161	585	685	105	58	100	165	18	300	380	420	530	5500	62
MVRH-200V	201	610	710	110	63	108	190	18	300	370	430	550	6900	81

MVRE

MC 精密倍力虎鉗
MC POWER VISE

- 虎鉗床身與活動鉗口一體鑄造，一體成型設計提供優異剛性，提升夾持穩定性與耐用性。
- 下壓式「半球段」機構，有效消除鉗口浮動與工件傾斜，特殊結構設計在夾持時產生下壓力道，有效提高加工精度與延長使用壽命。
- 高強度球墨鑄鐵主體（FCD60，相當於GGG60），虎鉗主體採用抗拉強度達 60 kgf/mm²（約 80,000 psi）的高剛性材料，適用於高負荷加工環境。
- 床身滑動面經火焰硬化處理至 HRC 45°，提升耐磨壽命，加強抗磨耗能力，適用長時間重複加工，維持穩定夾持性能。

- One-piece casting of the vise bed and movable jaw ensures excellent rigidity, enhancing clamping stability and durability.
- The down-thrust spherical segment mechanism generates downward force during clamping, preventing jaw lifting and workpiece tilting—improving machining accuracy and jaw life.
- Constructed from high-tensile ductile iron (FCD60 / equivalent to GGG60) with a tensile strength of 60 kgf/mm² (approx. 80,000 psi), suitable for demanding machining conditions.
- Flame-hardened slideways (HRC 45°) provide superior wear resistance, maintaining consistent clamping performance even under prolonged use.

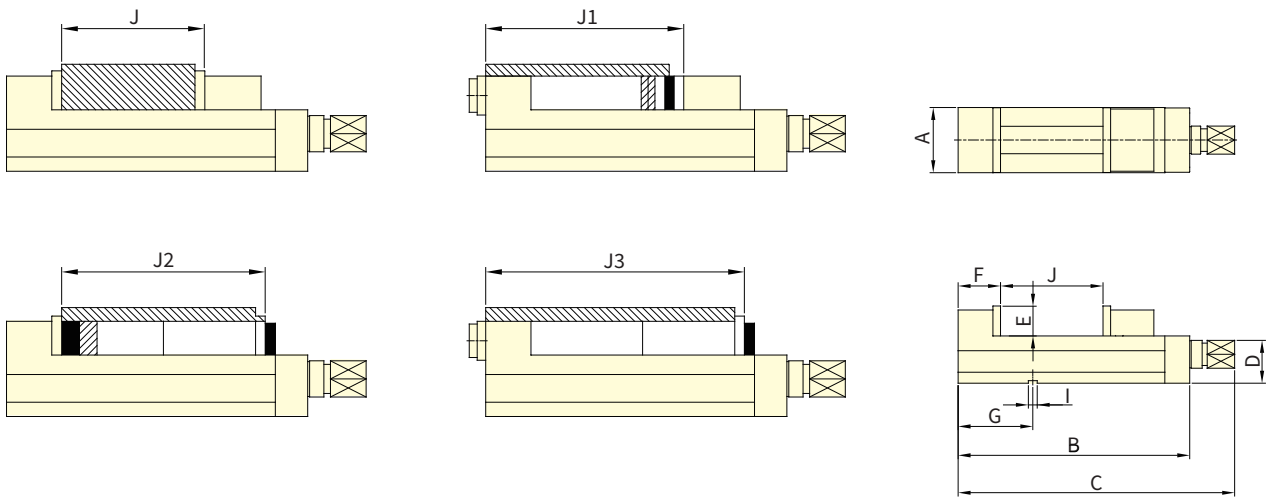

保留規格修改的權利
Subject to technical changes

外型尺寸 DIMENSIONS

MODEL	A	B	C	D	E	F	G	I	鉗口張開度（最大） Jaw Opening(Max.)				夾持力 Clamping Force (kgf)	重量 Weight (kgs)
									J	J1	J2	J3		
MVRE-100V	101	400	490	85	48	80	125	16	155	200	240	33	3000	27
MVRE-130V	131	645	555	95	55	85	150	18	230	250	300	390	3500	40
MVRE-160V	161	555	645	105	58	100	165	18	300	330	370	480	4000	60
MVRE-160VL	161	615	705	105	58	100	165	18	350	380	420	530	4000	62
MVRE-200V	201	630	720	110	63	108	190	18	340	370	430	550	4500	81

展刀搪溝頭 (一)
SINGLE-SLIDE FACING HEAD

- 進給機構是以單斜楔式的傳動方式為之，進給速度穩定，進給速度與行程的調整非常容易。
- 摺動面均經過硬化及精密研磨，剛性與耐久性非常良好。
- 定位精度:±0.03mm。
- Feed mechanism is Wedge Plunger, with steady feed speed. Simple adjustment for feed speed and stroke.
- Matching surfaces of all parts hardened, grounding and lubricated directly. With rigidity and durability.
- Stopper accurancy: ±0.03mm.

- 與行控型迴轉油壓缸搭配使用。
- 單斜楔式展刀頭可搭配伺服馬達及滾珠螺桿機構做精密展刀加工。
- Suitable for using with RS type cylinder.
- For precision processes, Wedge Plunger type facing heads are suitable for using with electro servo and ball screw mechanism.

單斜楔式傳動
WEDGE PLUNGER
FA-408

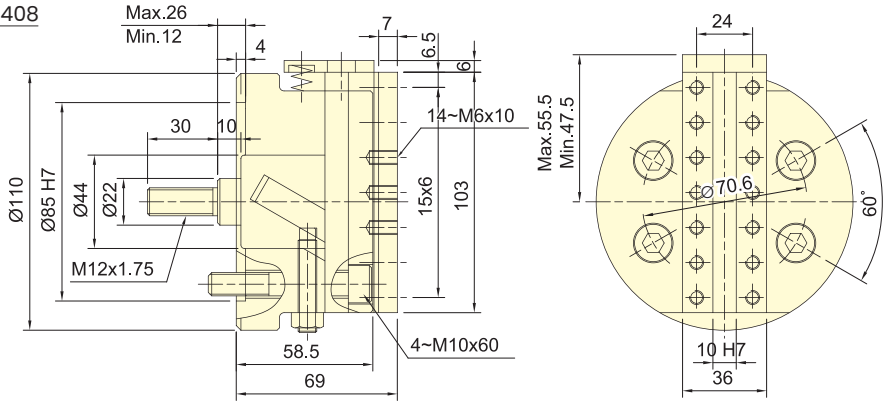

保留規格修改的權利
Subject to technical changes

技術規格 SPECIFICATIONS

型號	楔心行程	滑座行程	最高迴轉數	容許最大入力	重量	適用迴轉缸	最大使用壓力
Model	Plunger stroke	Slider stroke	Max. speed	Max. D.B. PULL	Weight	Matching cylinder	Max. pressure
	mm	mm	min^{-1}(r.p.m.)	kN(kgf)	kg		MPa(kgf/cm²)
FA-408	14	8	1600	2.8 (280)	4.2	RS-6520N	1.0(10)

單斜楔式傳動
WEDGE PLUNGER
FA-610 FA-812

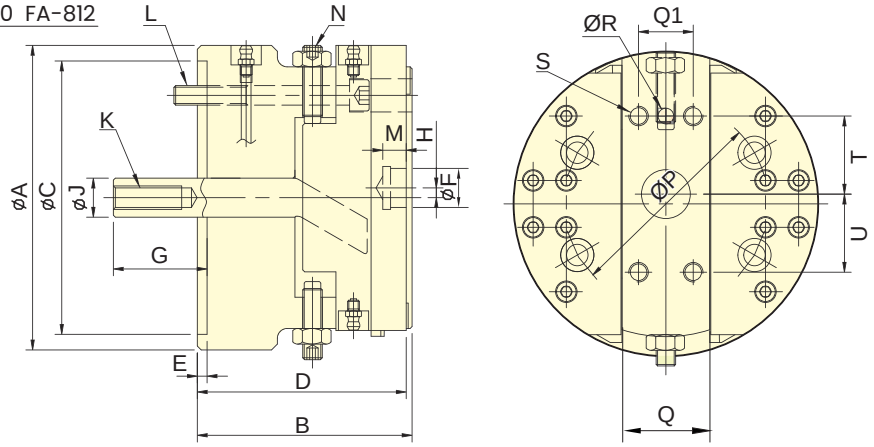

保留規格修改的權利
Subject to technical changes

技術規格 SPECIFICATIONS

型號	楔心行程	滑座行程	最高迴轉數	容許最大入力	重量	適用迴轉缸	最大使用壓力
Model	Plunger stroke	Slider stroke	Max. speed	Max. D.B. PULL	Weight	Matching cylinder	Max. pressure
	mm	mm	min^{-1}(r.p.m.)	kN(kgf)	kg		MPa(kgf/cm²)
FA-610	18	10	1200	2.8 (280)	14.5	RS-6520N	1.0(10)
FA-812	21	12	800	4.4 (450)	28.5	RS-6530N	1.6(16)

外型尺寸 DIMENSIONS

Model	A	B	C (H7)	D	E	F (H7)	G max.	G min.	H	J	K	L	M	N	P	Q	Q1	R (H8)	S	T	U
FA-610	156	110	140	107	5	20	66	48	±5	20	M12x1.75	4-M10x90	12	2-M10x45	104.8	45	28	8	4-M10x16	40	40
FA-812	198	130	170	127	5	25	84	63	±6	25	M16x2.0	4-M12x105	12	2-M12x60	133.4	54	32	10	4-M10x16	50	50

展刀搪溝頭 (二)
SINGLE-SLIDE FACING HEAD

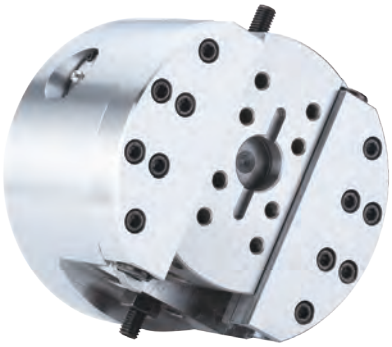

- 進給機構是以齒條與齒輪傳動方式為之，進給速度穩定，進給速度與行程的調整非常容易。
- 摺動面均經過硬化及精密研磨，剛性與耐久性非常良好。
- 定位精度:±0.03mm，需搭配定位螺栓。
- Feed mechanism is transmitted by Rack and Pinion with steady feed speed. Simple adjustment for feed speed and stroke.
- Matching surfaces of all parts hardened, grounding and lubricated directly. With rigidity and durability.
- Stopper accurancy: ±0.03mm , work with stoper screw.

- 與行控型迴轉油壓缸搭配使用。
- Suitable for using with RS type cylinder.

齒條與齒輪傳動 RACK AND PINION
FA-615 FA-830 FA-1570

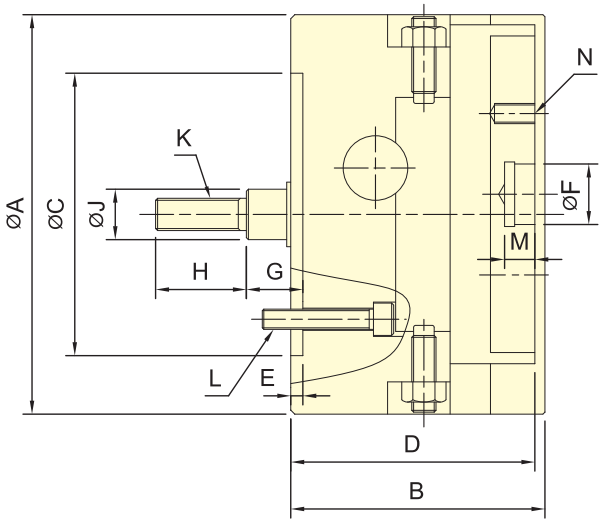

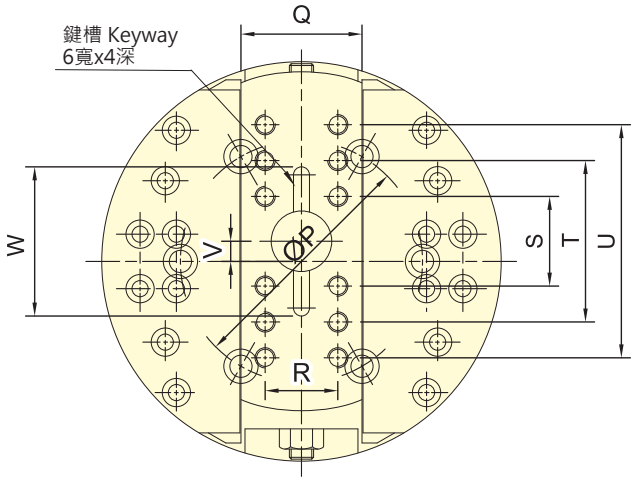

保留規格修改的權利
Subject to technical changes

技術規格 SPECIFICATIONS

型號 Model	楔心行程 Plunger stroke (mm)	滑座行程 Slider stroke (mm)	最高迴轉數 Max. speed (min⁻¹(r.p.m.))	容許最大入力 Max. D.B. PULL (kN(kgf))	重量 Weight (kg)	適用迴轉缸 Matching cylinder	最大使用壓力 Max. pressure (MPa(kgf/cm²))
FA-615	15	15	1200	3.3 (340)	11.9	RS-6520N	1.2(12)
FA-830	30	30	800	5.0 (510)	23.9	RS-6530N	1.8(18)
FA-1570	70	70	500	18.2 (1855)	167	RS-1080N	2.6(26)

外型尺寸 DIMENSIONS

Model	A	B	C (H7)	D	E	F (H7)	G max.	G min.	H	J	K
FA-615	150	107	110	102	5	25	43	28	35	20	M12x1.75
FA-830	198	126	140	121	6	30	55	25	45	25	M16x2
FA-1570	400	200	300	192	6	60	110	40	75	50	M30x3.5

Model	L	M	N	P	Q	R	S	T	U	V	W
FA-615	3-M10x40	12	8-M8x16	82.6	50	32	32	68	-	±7.5	56
FA-830	6-M10x55	15	12-M10x20	120	60	36	40	80	120	±15	66
FA-1570	6-M20x90	15	8-M16x20	235	120	80	130	260	-	±17.5	-

雙向展刀搪溝頭
DOUBLE-SLIDE FACING HEAD

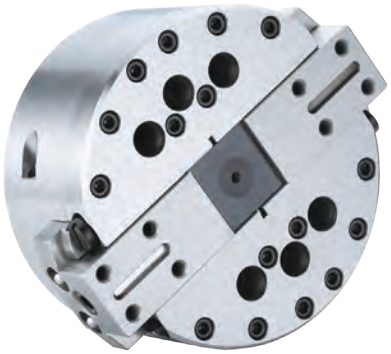

- 進給機構是以曲柄傳動方式為之，進給速度穩定，進給速度與行程的調整非常容易。
- 摺動面均經過硬化及精密研磨，剛性與耐久性非常良好。
- 定位精度：±0.03mm，需搭配定位螺栓。
- Feed mechanism is transmitted by Crank with steady feed speed. Simple adjustment for feed speed and stroke.
- Matching surfaces of all parts hardened, grounding and lubricated directly. With rigidity and durability.
- Stopper accurancy: ±0.03mm , work with stoper screw.

- 與行控型迴轉油壓缸搭配使用。
- Suitable for using with RS type cylinder.

曲柄傳動 CRANK TYPE
FD-632 FD-840 FD-1060

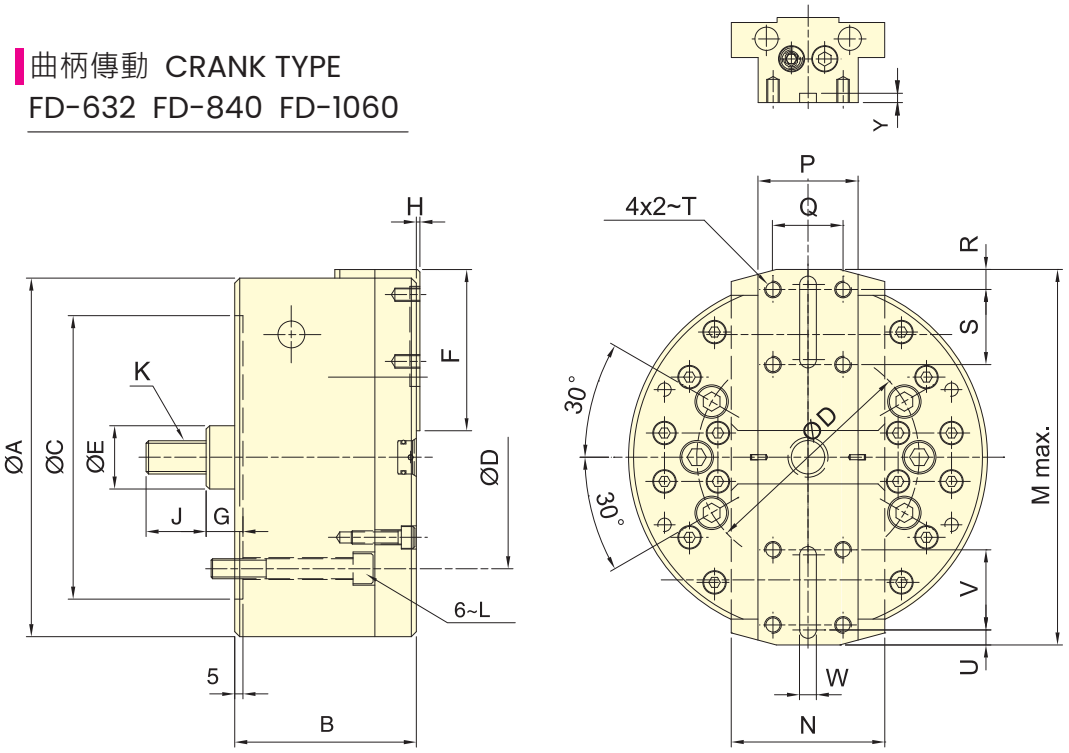

技術規格 SPECIFICATIONS

型號 Model	楔心行程 Plunger stroke (mm)	滑座行程(直徑) Slider stroke(Dia.) (mm)	最高迴轉數 Max. speed (min^{-1}(r.p.m.))	容許最大入力 Max. D.B. PULL (kN(kgf))	重量 Weight (kg)	適用迴轉缸 Matching cylinder	最大使用壓力 Max. pressure (MPa(kgf/cm²))
FD-632	20	32	3200	16.9 (1720)	13.6	RS-1030N	2.4(24)
FD-840	25	40	2500	20.6 (2100)	30.0	RS-1030N	3.0(30)
FD-1060	35	60	1800	20.6 (2100)	41.5	RS-1040N	3.0(30)

外型尺寸 DIMENSIONS

Model	A	B	C(H7)	D	E	F	G max.	G Min.	H	J	K
FD-632	168	93	140	104.8	32	76	31	11	2	36	M16x2.0
FD-840	215	109	170	133.4	38	96.5	32.5	7.5	2	36	M20x2.5
FD-1060	254	123	220	171.4	38	110.5	32.5	-2.5	4	36	M20x2.5

Model	L	M	N	P	Q	R	S	T	U	V	W(H8)	Y
FD-632	6~M10x75	188	70	40	25	10	32	M8x15	10	32	6	4
FD-840	6~M12x85	238	92	60	42	12	45	M10x15	12	45	10	6
FD-1060	6~M16x125	286	90	65	46	15	50	M10x15	12	50	10	6

同步夾具
SYNCHRONOUS CLAMP

- 曲柄型二爪同步夾具，爪行程長。
- 摺動面均經硬化及精密研磨，並直接潤滑。
- 高夾持精度，防塵效果特佳。
- CRANK type 2-jaw synchronous clamp with long jaw stroke.
- Matching surfaces of all parts hardened, ground and lubricated directly.
- High rigidity and high clamping accuracy.

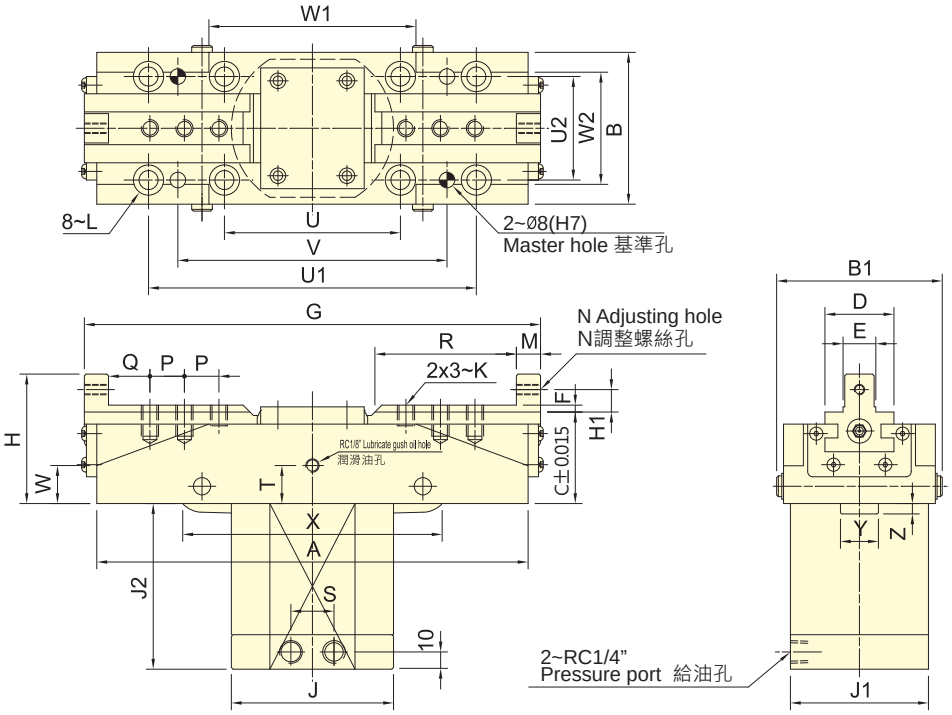

保留規格修改的權利
Subject to technical changes

技術規格 SPECIFICATIONS

型號 Model	活塞面積 Eff. Piston area 押側 Extend cm²	拉側 Retract cm²	爪行程(直徑) Jaw stroke(Dia.) mm	最大夾持能力 Clamping capacity mm	最大夾持力 Max. clamping force kN (kgf)	最大使用壓力 Max. pressure MPa(kgf/cm²)	重量 Weight kg
CP-20	28.27	25.13	20	150	14.4(1465)	3.5(35)	9.5
CP-30A	28.27	25.13	30	180	14.4(1465)	3.5(35)	11
CP-30	28.27	25.13	30	210	14.4(1465)	3.5(35)	12
CP-40	28.27	25.13	40	200	14.4(1465)	3.5(35)	12
CP-50	38.48	33.57	50	215	17.7(1812)	3.5(35)	18.5
CP-70	50.26	45.35	70	235	23.9(2434)	3.5(35)	30

外型尺寸 DIMENSIONS

Model	A	B	B1	C	D	E(h6)	F	G max.	Gmin	H	H1	J	J1	J2	K	L	M
CP-20	215	88	96	53	40	18	4	249	229	75	13	94	76	83.5	M10x1.5	M10	12
CP-30A	250	88	96	53	40	18	4	295	265	75	13	94	76	96	M10x1.5	M10	14
CP-30	280	88	96	53	40	22	4	327	297	75	13	94	76	96	M12x1.75	M10	14
CP-40	270	88	96	53	40	22	4	331	291	75	13	94	76	110	M12x1.75	M10	14
CP-50	300	110	115	65	50	28	5	369	319	90	15	105	105	120	M12x1.75	M10	16
CP-70	346	120	126	89	55	32	5	430	360	114	15	115	115	146	M14x2	M12	16

Model	N	P	Q	R	S	T	U	U1	U2	V	W	W1	W2	X	Y	Z
CP-20	M6x1	18	20	66	24	22	102	190	60	156	32	110	65	150	22	4
CP-30A	M6x1	20	24	96	24	22	102	190	60	156	20	120	65	156	22	6
CP-30	M6x1	20	24	98	24	22	102	190	60	156	23	110	65	156	22	6
CP-40	M6x1	20	24	98	24	22	102	190	60	156	25	110	65	150	22	10.5
CP-50	M8x1.25	21	28	102	30	32	105	230	85	195	29	140	80	180	30	10
CP-70	M8x1.25	23	28	112	30	52	120	275	95	240	42	155	90	210	34	23.5

斜楔式同步夾具
WEDGE-DRIVEN SYNCHRONOUS CLAMP

- 斜楔式驅動型同步夾具，爪行程長，在加工過程中，持續高夾持力。
- 摺動面均經硬化及精密研磨，並直接潤滑
- 高夾持精度，防塵效果佳。
- This wedge-driven synchronous clamp features a long jaw stroke, ensuring continuous high clamping force throughout the machining process.
- The sliding surfaces are hardened and precision ground, with direct lubrication to enhance performance.
- High clamping accuracy and excellent dust protection.

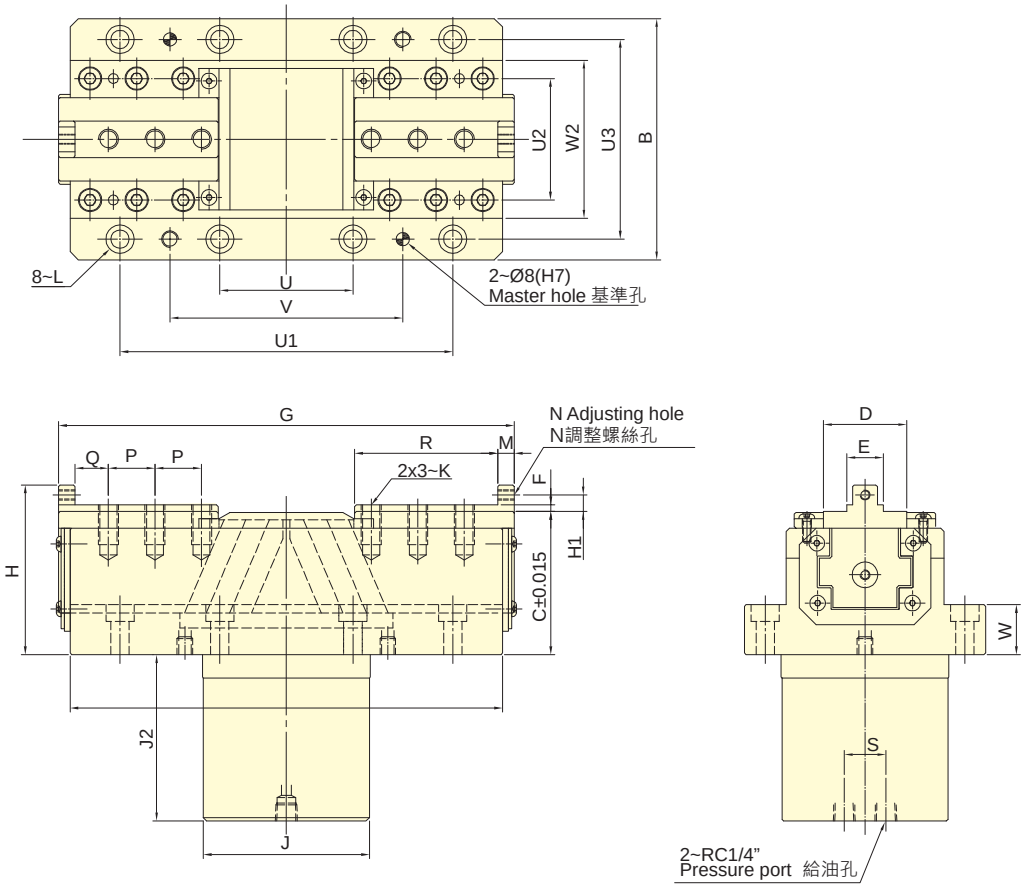

保留規格修改的權利
Subject to technical changes

技術規格 SPECIFICATIONS

型號	活塞面積 Eff. Piston area		爪行程(直徑)	最大夾持能力	最大夾持力	最大使用壓力	重量
Model	押側 Extend	拉側 Retract	Jaw stroke(Dia.)	Clamping capacity	Max. clamping force	Max. pressure	Weight
	cm^2	cm^2	mm	mm	kN (kgf)	MPa(kgf/cm^2)	kg
CW-30	31.10	24.10	30	150	34.3(3500)	7.0(70)	32

外型尺寸 DIMENSIONS

Model	A	B	C	D	E(h6)	F	Gmax	Gmin	H	H1	J	J2	K	L	M
CW-30	260	145	86	50	22	4	304	274	102	10	100	100	M12x1.75	M10	10

Model	N	P	Q	R	S	U	U1	U2	U3	V	W	W2
CW-30	M6x1	28	20	86	25	80	200	120	73	140	30	30

TK 超短型中空迴轉油壓缸 (一)
SHORT TYPE ROTATING HYDRAULIC CYLINDER WITH THRU-HOLE AND SAFETY DEVICE

- 超短，大孔徑型迴轉油壓缸，全長僅為從來型的2/3。
- 內建逆止閥自鎖機構及壓力洩壓閥。
- 安裝時可由後端鎖固之。
- Super short form, light weight large Through-Hole, just as 2/3 of typical model length.
- Built-in safety check valves and pressure relief valves.
- Can screw it from the rear end of the cylinder when mounting.

- 可附加線性定位系統機構。(選購品)
- Linear sensor can be attached.(optional)

- 專利產品字號 Patent numbers :
  台灣 : PAT.NO.M491534(Taiwan)
  大陸 : PAT.NO.ZL201420584274.5(China)

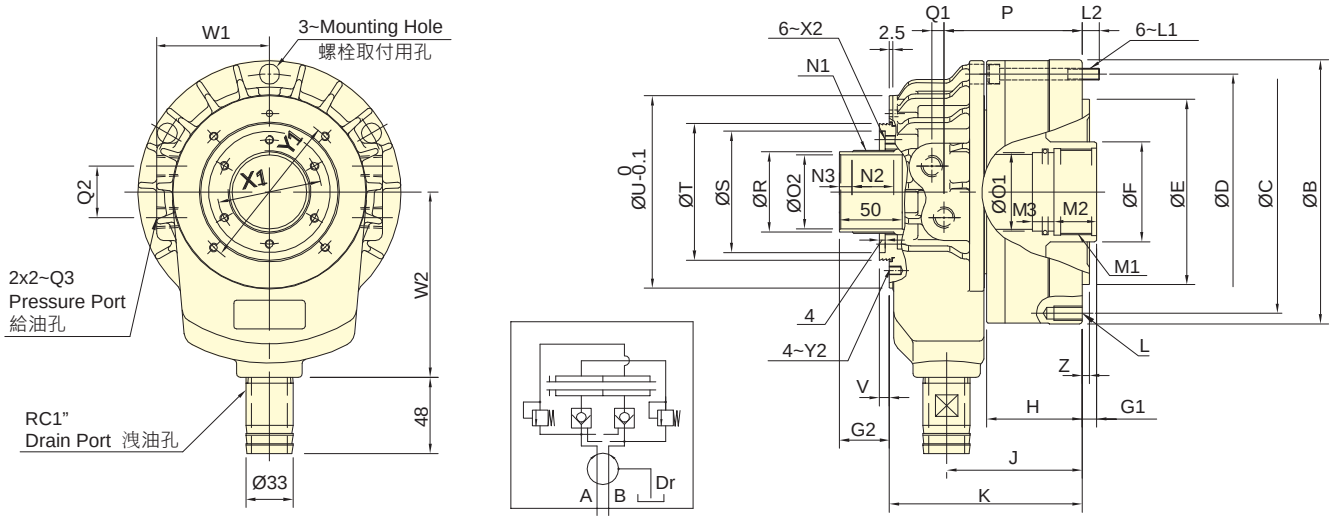

保留規格修改的權利
Subject to technical changes

技術規格 SPECIFICATIONS

型號	活塞面積Eff. piston area		行程	最高迴轉數	最高使用壓力	I	重量	總洩漏量
Model	押側(Extend)	拉側(Retract)	Piston stroke	Max. speed	Max. pressure	Moment of inertia	Weight	Total oil leakage
	cm^2	cm^2	mm	min^{-1}(r.p.m.)	MPa(kgf/cm^2)	$kg·m^2$	kg	lit. / min.
TK-A528	73.0	69.7	12	8000	4.5 (45)	0.012	6.2	3.0
TK-A533	73.0	69.7	12	8000	4.5 (45)	0.012	6.0	3.0
TK-C643	99.1	88.0	15	7000	4.5 (45)	0.018	7.5	3.0
TK-A646	105.0	93.9	15	7000	4.5 (45)	0.018	7.3	3.0
TK-B646	105.0	93.9	15	7000	4.5 (45)	0.018	8.6	3.0
TK-C646	99.1	88.0	15	7000	4.5 (45)	0.018	7.5	3.0
TK-B846	135.3	125.0	20	6300	4.5 (45)	0.032	12.4	3.9
TK-A853	135.3	125.0	20	6300	4.5 (45)	0.032	11.8	3.9
TK-B853	135.3	125.0	20	6300	4.5(45)	0.032	11.7	3.9
TK-A1068	170.1	155.3	25	5500	4.5 (45)	0.065	19.2	4.2
TK-A1075	170.1	155.3	25	5500	4.5(45)	0.065	18.8	4.2
TK-A1078	170.1	155.3	25	5500	4.5 (45)	0.065	17.4	4.2

* 集水盒及行程確認裝置請參閱零附件頁面。*Coolant Collector and Confirmation Device Please See Accessories pages.

外型尺寸 DIMENSIONS

Model	A 內徑 I.D.	B	C	D	E h7	F	G1 max.	G1 min.	G2 max.	G2 min.	H	J	K	L	L1	L2	M1	M2	M3
TK-A528	105	141	125	125	110	45	12	0	38	26	49	77.5	123	6~M8x20	M8x55	14	M38x1.5	25	13
TK-A533	105	141	125	125	110	45	12	0	38	26	49	77.5	123	6~M10x20	M8x55	14	M38x1.5	25	13
TK-C643	128	156	140	140	120	65	15	0	44	29	56	85	125	12~M10x20	M8x60	12	M50x2	25	13
TK-A646	128	162	147	147	130	65	15	0	44	29	56	85	125	12~M10x20	M8x60	12	M55x2	25	13
TK-B646	128	162	130	147	100	65	15	0	44	29	66	95	135	12~M10x20	M8x70	12	M55x2	30	15
TK-C646	125	156	140	140	120	65	15	0	44	29	56	85	125	12~M10x20	M8x60	12	M55x2	25	13
TK-B846	145	185	170	165	130	70	20	0	48	28	66	95	135	12~M10x20	M8x70	12	M55x2	30	15
TK-A853	145	185	170	165	140	70	20	0	48	28	66	95	135	12~M10x20	M8x70	12	M60x2	30	15
TK-B853	145	185	170	165	130	70	20	0	48	28	66	95	135	12~M10x20	M8x70	12	M60x2	30	15
TK-A1068	170	212	190	190	160	95	25	0	50	25	74	108	158	12~M10x20	M10x80	16	M75x2	35	15
TK-A1075	170	212	190	190	160	95	25	0	50	25	74	108	158	12~M10x20	M10x80	16	M85x2	35	15
TK-A1078	170	212	190	190	160	95	25	0	50	25	74	108	158	12~M10x20	M10x80	16	M87x2	35	15

Model	N1	N2	N3	O1 H8	O2 H8	P	Q1	Q2	Q3	R g7	S H7	T	U	V	W1	W2	X1	X2	Y1	Y2	Z
TK-A528	M39x1.5	25	8	35	28	79	8.5	30	RC1/4	37	62	70	98	6	62	110	49	M6x6	83	M5x6	5
TK-A533	M39x1.5	25	8	35	33	79	8.5	30	RC1/4	37	62	70	98	6	62	110	49	M6x6	83	M5x6	5
TK-C643	M52x1.5	29	9	45	43	87	8.5	36	RC3/8	50	76	85	116	9.5	74	120	64	M6x10	98	M5x6	5
TK-A646	M52x1.5	29	9	50	46	87	8.5	36	RC3/8	50	76	85	116	9.5	74	120	64	M6x10	98	M5x6	5
TK-B646	M52x1.5	29	9	50	46	97	8.5	36	RC3/8	50	76	85	116	9.5	74	120	64	M6x10	98	M5x6	5
TK-C646	M52x1.5	29	9	50	46	87	8.5	36	RC3/8	50	76	85	116	9.5	74	120	64	M6x10	98	M5x6	5
TK-B846	M58x1.5	30	8	50	46	97	8.5	36	RC3/8	56	85	96	128	11.5	79	130	73	M6x12	110	M6x6	5
TK-A853	M58x1.5	30	8	55	53	97	8.5	36	RC3/8	56	85	96	128	11.5	79	130	73	M6x12	110	M6x6	5
TK-B853	M58x1.5	30	8	55	53	97	8.5	36	RC3/8	56	85	96	128	11.5	79	130	73	M6x12	110	M6x6	5
TK-A1068	M84x2	34	9	70	68	110	12	40	RC1/2	81	108	121	164	10	98	160	98	M6x12	155	M6x8	5
TK-A1075	M84x2	34	9	80	75	110	12	40	RC1/2	81	108	121	164	10	98	160	98	M6x12	155	M6x8	5
TK-A1078	M84x2	34	9	82	78	110	12	40	RC1/2	81	108	121	164	10	98	160	98	M6x12	155	M6x8	5

TK 超短型中空迴轉油壓缸 (二)
SHORT TYPE ROTATING HYDRAULIC CYLINDER WITH THRU-HOLE AND SAFETY DEVICE

- 超短，大孔徑型迴轉油壓缸，全長僅為從來型的2/3。
- 內建逆止閥自鎖機構及壓力洩壓閥。
- 安裝時可由後端鎖固之。
- Super short form, light weight large Through-Hole, just as 2/3 of typical model length.
- Built-in safety check valves and pressure relief valves.
- Can screw it from the rear end of the cylinder when mounting.

- 可附加線性定位系統機構。(選購品)
- Linear sensor can be attached.(optional)

- 專利產品字號 Patent numbers :
  台灣 : PAT.NO.M491534(Taiwan)
  大陸 : PAT.NO.ZL201420584274.5(China)

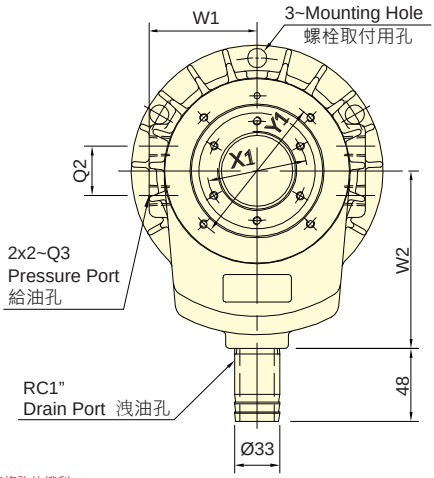

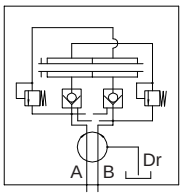

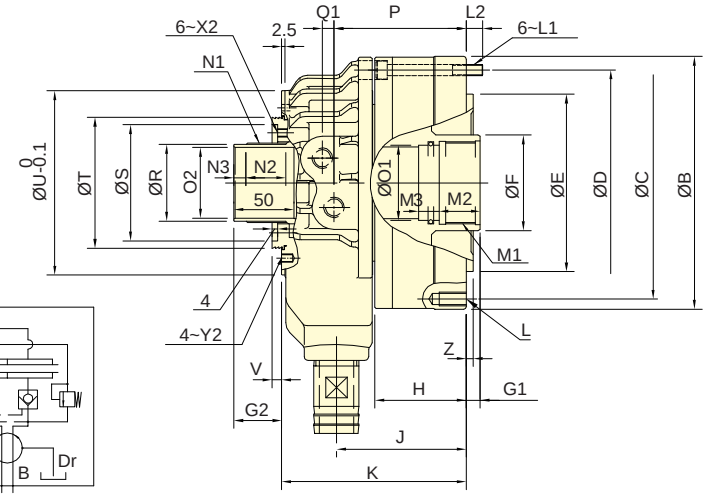

保留規格修改的權利
Subject to technical changes

技術規格 SPECIFICATIONS

型號 Model	活塞面積Eff. piston area 押側(Extend) cm²	拉側(Retract) cm²	行程 Piston stroke mm	最高迴轉數 Max. speed min⁻¹(r.p.m.)	最高使用壓力 Max. pressure MPa(kgf/cm²)	I Moment of inertia kg·m²	重量 Weight kg	總洩漏量 Total oil leakage lit. / min.
TK-A1287	234.0	217.5	30	3800	4.0 (40)	0.092	24.8	4.5
TK-A1291	234.0	217.5	30	3800	4.0 (40)	0.092	24.8	4.5
TK-A1511	336.4	315.2	30	3000	3.5(35)	0.38	57.9	7.0
TK-A1512	336.4	315.2	30	3000	3.5(35)	0.38	53.8	7.0
TK-A1512-35	336.4	315.2	35	3000	3.5(35)	0.38	53.8	7.0
TK-2114	373.2	336.1	35	2500	3.0 (30)	0.54	58.2	8.0

外型尺寸 DIMENSIONS

Model	A 內徑 I.D.	B	C	D	E h7	F	G1 max.	G1 min.	G2 max.	G2 min.	H	J	K	L	L1	L2	M1	M2	M3	N1
TK-A1287	200	245	215	225	180	110	30	0	59	29	86	126	184	12~M12x24	M10x90	14.5	M95x2	35	15	M99x2
TK-A1291	200	245	215	225	180	110	30	0	59	29	86	126	184	12~M12x24	M10x90	14.5	M100x2	35	15	M99x2
TK-A1511	250	300	275	275	230	140	30	0	58	28	102	156	226	12~M16x36	M12x110	21	M120x2	45	15	M129x2
TK-A1512	250	300	275	275	230	140	30	0	58	28	102	156	226	12~M16x36	M12x110	21	M130x2	45	15	M129x2
TK-A1512-35	250	300	275	275	230	140	35	0	63	28	102	161	231	12~M16x36	M12x115	21	M130x2	45	15	M129x2
TK-2114	265	320	295	295	240	165	35	0	60	25	115	173.5	247.5	12~M16x32	M12x120	17.5	M155x2	45	20	M149x2

Model	N2	N3	O1 H8	O2 H8	P	Q1	Q2	Q3	R g7	S H7	T	U	V	W1	W2	X1	X2	Y1	Y2	Z
TK-A1287	38	9	90	87	127.5	15	45	RC1/2	96	120	138	180	7	110	185	108	M6x10	165	M6x10	5
TK-A1291	38	9	95	91	127.5	15	45	RC1/2	96	120	138	180	7	110	185	108	M6x10	165	M6x10	5
TK-A1511	38	9	115	110	153.75	17	50	RC1/2	126	150	170	227	7	134	210	138	M6x10	210	M6x9	6
TK-A1512	38	9	125	120	153.75	17	50	RC1/2	126	150	170	227	7	134	210	138	M6x10	210	M6x9	6
TK-A1512-35	38	9	125	120	158.75	17	50	RC1/2	126	150	170	227	7	134	210	138	M6x10	210	M6x9	6
TK-2114	38	9	145	140	170	17	50	RC1/2	146	170	190	250	7	145	210	160	M6x10	230	M6x10	6

* 集水盒及行程確認裝置請參閱零附件頁面。*Coolant Collector and Confirmation Device Please See Accessories pages.

TK 超短型中空迴轉油壓缸 (三)
SHORT TYPE ROTATING HYDRAULIC CYLINDER WITH THRU-HOLE AND SAFETY DEVICE

- 全新短型設計，大孔徑型迴轉油壓缸。
- 內建逆止閥自鎖機構及壓力洩壓閥。
- New design, short form, light weight large through-hole.
- Built-in safety check valves and pressure relief valves.

- 可附加線性定位系統機構。(選購品)
- Linear sensor can be attached.(optional)

- 專利產品字號 Patent numbers :
  台灣 : PAT.NO.M491534(Taiwan)
  大陸 : PAT.NO.ZL201420584274.5(China)

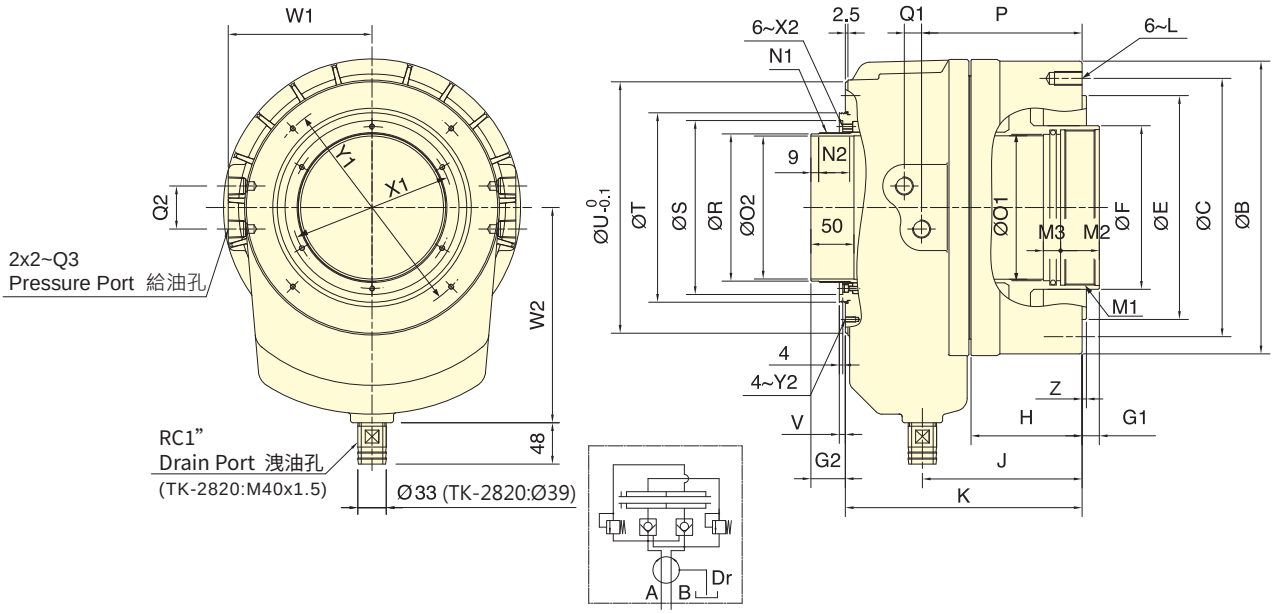

保留規格修改的權利
Subject to technical changes

技術規格 SPECIFICATIONS

型號	活塞面積 Eff. piston area		行程	最高迴轉數	最高使用壓力	I	重量	總洩漏量
Model	押側(Extend)	拉側(Retract)	Piston stroke	Max. speed	Max. pressure	Moment of inertia	Weight	Total oil leakage
	cm^2	cm^2	mm	min^{-1}(r.p.m.)	MPa(kgf/cm^2)	$kg{\cdot}m^2$	kg	lit. / min.
TK-2416	418.4	375.4	35	2000	3.0 (30)	1.12	78.0	9.0
TK-2416L	418.4	375.4	51	2000	3.0 (30)	1.31	79.2	9.0
TK-2820	526.2	472.6	51	1600	3.0 (30)	2.4	134.0	10.0

外型尺寸 DIMENSIONS

Model	A	B	C	E	F	G1		G2		H	J	K	L	M1	M2	M3	N1	N2
	內徑I.D.			h7		max.	min.	max.	min.									
TK-2416	290	340	300	260	190	35	0	60	25	129	185.5	275	M16x32	M180x3	45	20	M174x2	38
TK-2416L	290	340	300	260	190	51	0	76	25	145	201.5	291	M16x32	M180x3	45	20	M174x2	52
TK-2820	340	395	360	320	235	51	0	76	25	152	212.5	316	M20x40	M220x3	45	20	M218x2	52

Model	O1	O2	P	Q1	Q2	Q3	R	S	T	U	V	W1	W2	X1	X2	Y1	Y2	Z
	H8	H8					g7	H7										
TK-2416	170	166	186.5	20	50	RC1/2	171	202	220	292	7	167	250	188	M6x11	260	M6x12	5
TK-2416L	170	166	202.5	20	50	RC1/2	171	202	220	292	7	167	250	188	M6x11	260	M6x12	6
TK-2820	210	205	216	21	50	RC1/2	215	262	285	360	7	202.5	300	240	M6x12	320	M6x12	6

* 集水盒及行程確認裝置請參閱零附件頁面。*Coolant Collector and Confirmation Device Please See Accessories pages.

TS 大孔徑超短型中空迴轉油壓缸

SHORT TYPE ROTARY HYDRAULIC CYLINDER WITH BIG-BORE THRU-HOLE AND SAFETY DEVICE

- 全新短型設計，超大孔徑型迴轉油壓缸。
- 超大孔徑的貫通孔徑設計使加工物之貫通孔徑的範圍增大。
- 內建逆止閥自鎖機構及壓力洩壓閥。
- 安裝時可由後端鎖固之。
- Bigger bore through-hole design.Super short form, light weighted.
- Built-in safety check valves and pressure relief valves.
- Front/Rear end mounting.

- 可選購 Ø40 或 Ø60 加大排水管接頭。
- 可附加線性定位系統機構。(選購品)
- Diameter of coolant collector' s drain port is optional.
  Default : Ø33 ; optional : Ø40, Ø60.
- Linear sensor can be attached.(optional)

- 專利產品字號 Patent numbers :
  台灣 : PAT.NO.M491534(Taiwan) / 大陸 : PAT.NO.ZL201420584274.5(China)

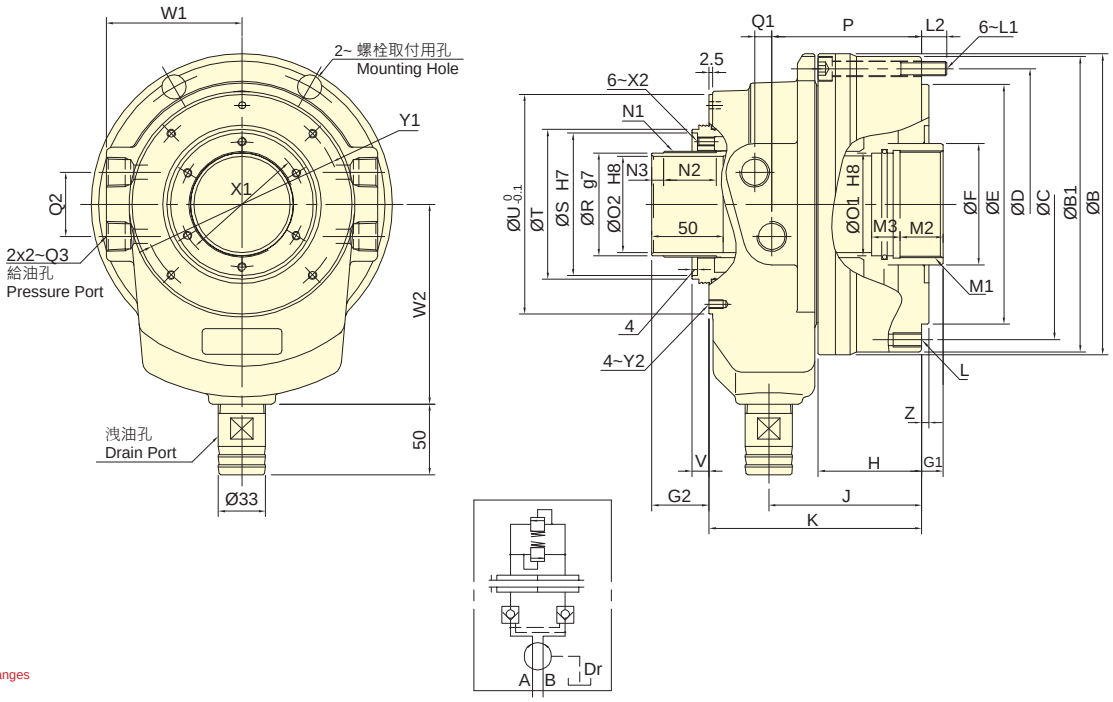

保留規格修改的權利
Subject to technical changes

技術規格 SPECIFICATIONS

型號 Model	活塞面積 Eff. piston area 押側(Extend) cm²	拉側(Retract) cm²	行程 Piston stroke mm	最高迴轉數 Max. speed min⁻¹(r.p.m.)	最高使用壓力 Max. pressure MPa(kgf/cm²)	I Moment of inertia kg·m²	重量 Weight kg	總洩漏量 Total oil leakage lit. / min.
TS-539	72.4	67.1	15	8000	4.5(45)	0.012	6.9	3.0
TS-866	168.0	155.5	25	5600	4.5(45)	0.056	16.3	4.0
TS-1081	189.2	174.3	25	4800	4.5(45)	0.085	21.2	4.3
TS-1210	231.7	222.0	30	3500	3.5(35)	0.193	35.6	6.0

外型尺寸 DIMENSIONS

Model	A 內徑 I.D.	B	B1	C	D	E h7	F	G1 max.	G1 min.	G2 max.	G2 min.	H	J	K	L	L1	L2	M1	M2	M3
TS-539	107	143	141	125	125	110	52	15	0	42.5	27.5	57	91	124	6~M10x20	M8x60	12	M45x1.5	25	12
TS-866	165	211	207	190	190	168	85	25	0	55	30	72.5	107	149	12~M10x20	M10x80	17.5	M75x2	35	15
TS-1081	180	226	222	205	205	168	100	25	0	58	33	74	115	166	12~M10x20	M10x80	16	M90x2	35	15
TS-1210	210	263	260	240	240	200	125	30	0	64	34	93.5	136.5	193.5	12~M10x20	M12x100	20	M115x2	35	15

Model	N1	N2	N3	O1 (H8)	O2 (H8)	P	Q1	Q2	Q3	R (g7)	S (H7)	T	U	V	W1	W2	X1	X2	Y1	Y2	Z
TS-539	M44x1.5	26	8	42	39	85	8.5	30	RC1/4	42	69	72	103	10	62.5	100	54	M6x10	90	M5x12	5
TS-866	M74x1.5	37	8	72	66.5	105	12	45	RC1/2	72	100	111	154	12	95	140	88	M6x12	140	M6x10	5
TS-1081	M89X2.0	38	9	85	81	109	15	45	RC1/2	86	113	123	175	16	103	160	103	M6x12	160	M6X10	5
TS-1210	M118x2.0	47	9	110	106	131	16	46	RC1/2	115	145	151	210	16	103	160	133	M6x12	195	M6x11	5

* 集水盒及行程確認裝置請參閱零附件頁面。*Coolant Collector and Confirmation Device. Please See Accessories pages.

TH 中空迴轉油壓缸
ROTATING HYDRAULIC CYLINDER WITH THRU-HOLE AND SAFETY DEVICE

- 超高速，輕量，大孔徑型迴轉油壓缸。
- 內建逆止閥自鎖機構，可防止壓力源故障或配管部損傷時，確保壓力不致遽降，而能持續穩固的夾持工作物。
- Super high speed, light weight large Through-Hole.
- Built-in check valve which prevents the internal pressure from sudden declining so that the workpiece will not fly out and cause a serious accident.
- 可附加線性定位系統機構。(選購品)
- Linear sensor can be attached.(optional)

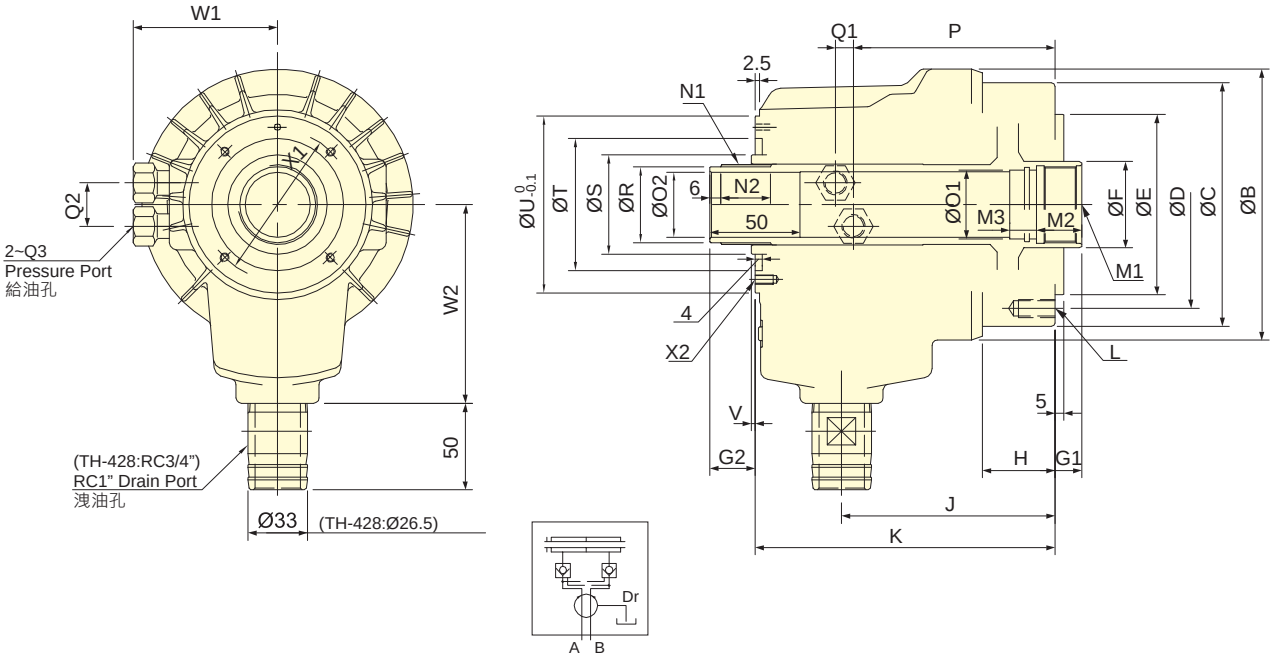

保留規格修改的權利
Subject to technical changes

技術規格 SPECIFICATIONS

型號	活塞面積 Eff. piston area		行程	最高迴轉數	最高使用壓力	I	重量	總洩漏量
Model	押側(Extend)	拉側(Retract)	Piston stroke	Max. speed	Max. pressure	Moment of inertia	Weight	Total oil leakage
	cm^2	cm^2	mm	min^{-1}(r.p.m.)	MPa(kgf/cm^2)	kg·m^2	kg	lit. / min.
TH-428	53.2	50.5	10	8000	4.0(40)	0.008	5.8	3.0
TH-A536	69.8	67.5	15	8000	4.0(40)	0.05	8.3	3.0

外型尺寸 DIMENSIONS

Model	A 內徑 I.D.	B	C	D	E (h7)	F	G1 max.	G1 min.	G2 max.	G2 min.	H	J	K	L	M1	M2	M3
TH-428	90	130	120	100	80	40	10	0	35	25	45	127.5	155	6-M8x15	M33x1.5	25	12
TH-A536	105	150	135	115	100	48	15	0	40	25	40	118	166	6-M10x20	M42x1.5	25	15

Model	N1	N2	O1 (H8)	O2 (H8)	P	Q1	Q2	Q3	R (g7)	S	T	U	V	W1	W2	X1	X2
TH-428	M34x1.5	26	30	28	101.5	11	24	RC1/4	32	45	65	86	4	72	105	76	M4x7
TH-A536	M44x1.5	28	38	36	111.5	10	24	RC1/4	42	55	73	98	4	80	110	83	M5x10

* 集水盒及行程確認裝置請參閱零附件頁面。*Coolant Collector and Confirmation Device Please See Accessories pages.

輕短型中空迴轉油壓缸

超短高速輕量型

SMALL TYPE ROTARY HYDRAULIC CYLINDER WITH THRU-HOLE AND SAFETY DEVICE

- 外型長度精短，重量輕巧。
- 內建專利逆止閥與洩壓閥，安全保障更確實。
- 大給油孔與大洩油孔。入油量大，排油順暢。
- 後鎖安裝與前鎖安裝兩用。空間應用更靈活。
- 可應用於立式與臥式主軸。

- This is a compact, short form, light weight through-hole rotary cylinder.
- With patented build-in safety check valves and pressure relief valves.
- Large feed port and drain port, large input and keep drain smoothly.
- Can be screwed from the front end or rear end of cylinder when mounting.
- For use with vertical or horizontal spindles.

- 可附加線性定位系統機構。(選購品)
- Linear sensor can be attached.(optional)

- 專利產品字號 Patent numbers :
  台灣 : PAT.NO.M491534(Taiwan)
  大陸 : PAT.NO.ZL201420584274.5(China)

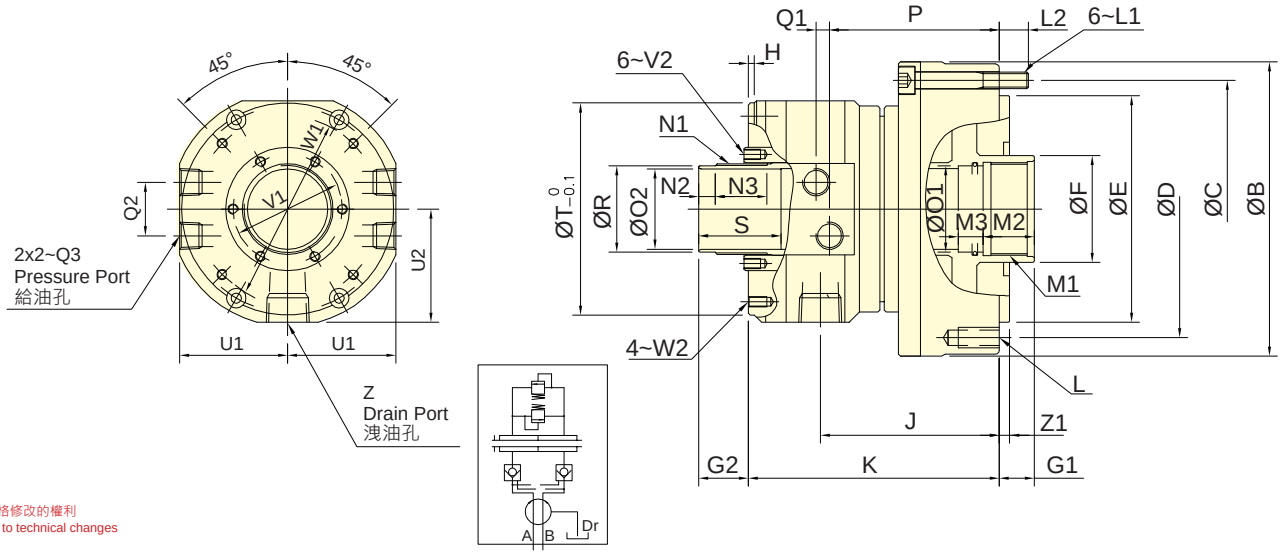

保留規格修改的權利
Subject to technical changes

技術規格 SPECIFICATIONS

型號 Model	活塞面積 Eff. piston area 押側(Extend) cm²	拉側(Retract) cm²	行程 Piston stroke mm	最高迴轉數 Max. speed min⁻¹(r.p.m.)	最高使用壓力 Max. pressure MPa(kgf/cm²)	I Moment of inertia kg·m²	重量 Weight kg	總洩漏量 Total oil leakage lit. / min.
TR-539	72.4	67.1	15	8000	4.0(40)	0.010	6.8	3.0
TR-646	105.0	93.9	15	7000	4.0(40)	0.015	9.5	3.0
TR-853	135.3	125	20	6300	4.0(40)	0.032	11.5	3.9
TR-1075	170	155	25	4500	4.0(40)	0.065	18	4.2
TR-1291	234	217.5	30	3500	4.0(40)	0.092	29.5	4.5

外型尺寸 DIMENSIONS

Model	A 內徑 I.D.	B	C	D	E h7	F	G1 max.	G1 min.	G2 max.	G2 min.	H	J	K	L	L1	L2	M1	M2	M3
TR-539	107	143	125	125	110	52	15	0	34	19	4	97	133	6-M10x20	M8x60	12	M45x1.5	25	12
TR-646	128	165	147	147	130	65	15	0	34	19	3.5	97	135	12-M10x20	M8x60	11.5	M55x2	25	13
TR-853	145	185	165	170	130	70	20	0	47	27	4.5	118.5	160	12~M10X20	M8x75	12	M60x2	30	15
TR-1075	170	212	190	190	160	95	25	0	52	27	4.5	129.5	181	12~M10x20	M10x85	16	M85x2	35	15
TR-1291	200	248	225	215	180	110	30	0	59	29	5	146	240.5	12~M12x24	M10x95	16	M100x2	35	15

Model	N1	N2	N3	O1 H8	O2 H8	P	Q1	Q2	Q3	R g7	S	T	U1	U2	V1	V2	W1	W2	Z	Z1
TR-539	M44x1.5	8	25	42	39	92.5	6.5	26	RC 1/4	42	40	103	52.5	55	53	M5x8	90	M5x9	RC 1/2	5
TR-646	M52x1.5	8	25	50	46	95	5	32	RC 3/8	50	50	116	59	62	61.5	M5x9	98	M5x9	RC 1/2	5
TR-853	M58x1.5	8	30	55	53	114	8	34	RC 3/8	56	50	128	65	67	70	M5x10	110	M6x11	RC 1/2	5
TR-1075	M84x2	9	33	80	75	123.5	12	40	RC 1/2	81	50	164	83	86	95	M5x10	155	M6x11	RC 3/4	5
TR-1291	M99x2	9	38	95	91	139	14	45	RC1/2	96	50	180	91.5	93	110.5	M6x12	165	M6x12	RC3/4	5

* 集水盒及行程確認裝置請參閱零附件頁面。*Coolant Collector and Confirmation Device Please See Accessories pages.

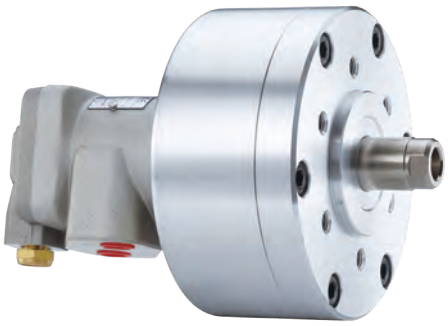

- 迴轉閥體與缸體皆採用特殊輕合金製造而成，重量輕。
- 迴轉閥經特殊設計，能使壓縮空氣的消耗量大量減少，充分發揮高經濟效益。
- The rotary valve and cylinder body, all made of special light alloy, are light-weight.
- Through unique design, the rotary valve can considerably reduce the waste in compressing air and efficiently increase its utillization.

- 使用時，請混入微量的油霧。
- When used, a little oil mist should be contained.

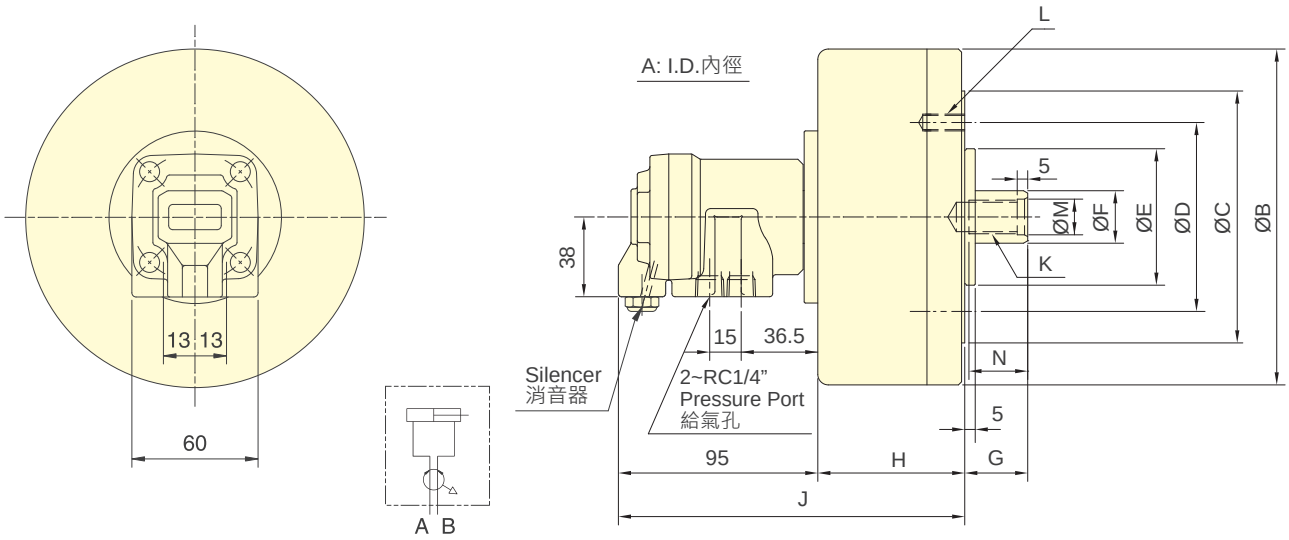

保留規格修改的權利
Subject to technical changes

技術規格 SPECIFICATIONS

型號	活塞面積 Eff. piston area		行程	最高迴轉數	最高使用壓力	I	重量	空氣洩漏量
Model	押側(Extend)	拉側(Retract)	Piston stroke	Max. speed	Max. pressure	Moment of inertia	Weight	Air Leakage(6kgf/cm²)
	cm²	cm²	mm	min⁻¹(r.p.m.)	MPa(kgf/cm²)	kg·m²	kg	cc/sec
RA-100	77.0	74.4	15	6000	0.8(8)	0.03	3.9	400
RA-130	131.2	124.7	15	5000	0.8(8)	0.05	5.2	400
RA-170	225.4	219.0	20	5000	0.8(8)	0.18	8.5	400
RA-220	378.6	369.3	25	4000	0.8(8)	0.36	14.5	400
RA-270	571.0	562.9	30	3000	0.8(8)	0.75	18.4	400

外型尺寸 DIMENSIONS

Model	A	B	C	D	E (h7)	F	G max.	G min.	H	J	K	L	M (H8)	N
RA-100	100	130	-	80	60	22	50	35	65	160	M12x1.75	6-M8x16	13	25
RA-130	130	160	120	90	65	25	45	30	70	165	M16x2.0	6-M8x16	17	30
RA-170	170	200	140	100	80	25	45	25	85	180	M16x2.0	6-M10x18	17	30
RA-220	220	255	170	130	110	30	50	25	91	186	M20x2.5	6-M12x20	21	35
RA-270	270	305	190	130	110	35	55	25	105	200	M24x3.0	6-M12x20	25	40

中實迴轉油壓缸
ROTATING HYDRAULIC CYLINDER

- 迴轉閥體與缸體皆採用特殊輕合金製造而成，重量輕。
- 迴轉閥經特殊設計，使得內部的軸承能充分的潤滑及冷卻，而能耐高速迴轉，增長壽命。
- The rotary valve and cylinder body, all made of special light alloy, light-weight.
- Through unique design, the rotary valve enables the inside bearing to get sufficient lubricating and cooling and endure high-speed rotary for longer service life.

- 洩油孔配管務必單獨接回油壓槽，以避免產生背壓。
- The drain port should be independently connected to oil tank to avoid back pressure.

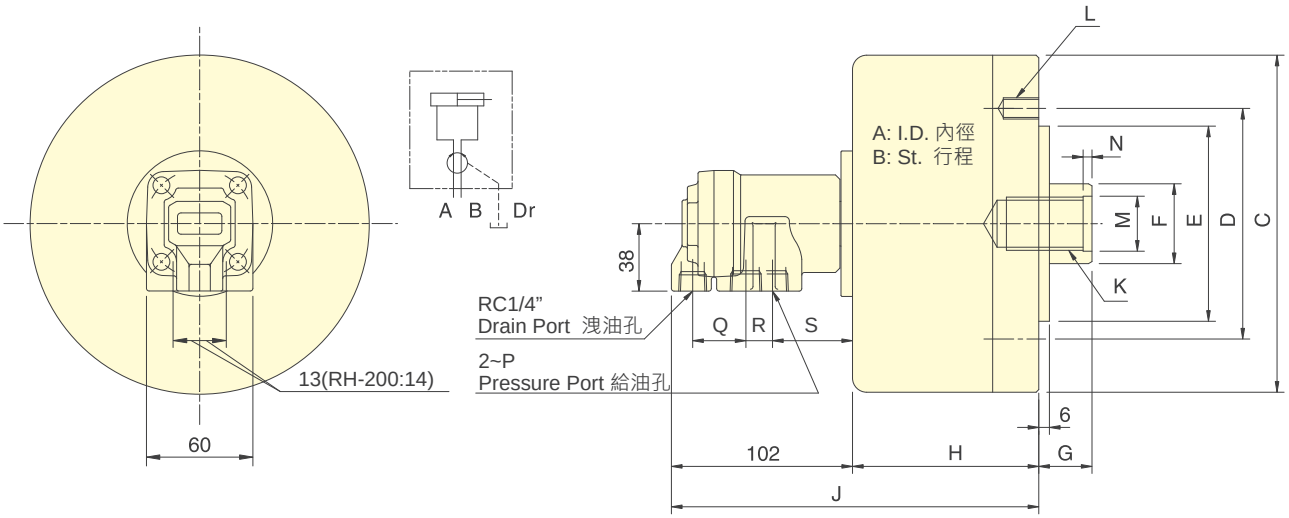

技術規格 SPECIFICATIONS

型號 Model	活塞面積 Eff. piston area 押側(Extend) cm²	拉側(Retract) cm²	行程 Piston stroke mm	最高迴轉數 Max. speed min⁻¹(r.p.m.)	最高使用壓力 Max. pressure MPa(kgf/cm²)	I Moment of inertia kg·m²	重量 Weight kg
RH-65	31.0	27.9	15	6000	3.5(35)	0.01	2.9
RH-80	47.7	42.8	15	6000	3.5(35)	0.01	3.4
RH-100	75.4	70.5	20	5500	3.5(35)	0.04	4.9
RH-125	119.6	112.5	25	5500	3.5(35)	0.08	6.8
RH-200	310.0	286.3	35	4000	4.0(40)	0.38	20.4

外型尺寸 DIMENSIONS

Model	A	B	C	D	E (h7)	F	G max.	G min.	H	J	K	L	M (H8)	N	P	Q	R	S
RH-65	65	15	98	80	60	22	45	30	73	175	M12x1.75x30	6~M8x16	14	4	RC3/8	30	15	45
RH-80	80	15	112	90	65	25	45	30	74	176	M16x2.0x30	6~M8x16	17	4	RC3/8	30	15	45
RH-100	100	20	135	100	80	25	45	25	88.5	190.5	M16x2.0x30	6~M10x20	17	4	RC3/8	30	15	45
RH-125	125	25	160	130	110	30	50	25	95.5	197.5	M20x2.5x35	6~M12x20	21	4	RC3/8	30	15	45
RH-200	200	35	245	145	120	55	70	35	130	232	M36x4	12~M16x30	38	5	RC1/2	31	16	43

附逆止閥中實迴轉油壓缸
ROTATING HYDRAULIC CYLINDER WITH SAFETY DEVICE

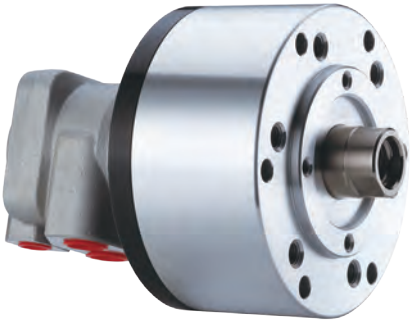

- 短型，高速，輕量型迴轉油壓缸。
- 內建逆止閥自鎖機構及壓力洩壓閥。
- 安裝時可由後端鎖固之。
- For short form, light weight and high speed rotary cylinder.
- Built-in safety check valves and pressure relief valves.
- Can screw it from the rear end of the cylinder when mounting.

- 洩油孔配管務必單獨接回油壓槽，以避免產生背壓。
- The drain port should be independently connected to oil tank to avoid back pressure.

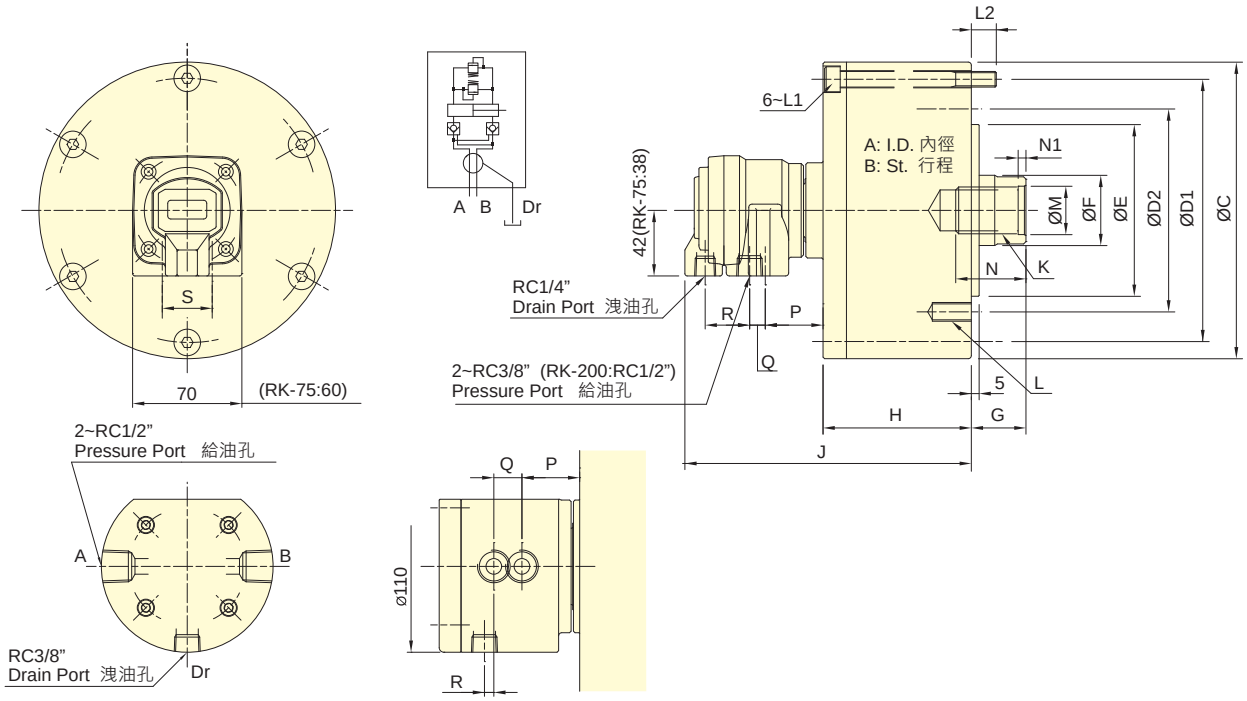

RK-250

保留規格修改的權利
Subject to technical changes

技術規格 SPECIFICATIONS

型號	活塞面積 Eff. piston area		行程	最高迴轉數	最高使用壓力	I	重量
Model	押側(Extend)	拉側(Retract)	Piston stroke	Max. speed	Max. pressure	Moment of inertia	Weight
	cm^2	cm^2	mm	min^{-1}(r.p.m.)	MPa(kgf/cm^2)	kg·m^2	kg
RK-75	44.2	37.1	15	6000	4.0 (40)	0.01	2.9
RK-100	78.5	71.5	20	6000	4.0 (40)	0.03	4.4
RK-125	122.7	113.1	25	6000	4.0 (40)	0.05	6.9
RK-150	176.7	160.8	30	5500	4.0 (40)	0.09	9.5
RK-200	314.1	290.4	35	5500	4.0 (40)	0.28	15.4
RK-250	469.1	436.0	60	2000	5.0(50)	0.40	45.2

外型尺寸 DIMENSIONS

Model	A	B	C	D1	D2	E (h7)	F	G max.	G min.	H	J	K	L	L1	L2	M (H8)	N	N1	P	Q	R	S
RK-75	75	15	107	90	90	65	30	45	30	57	148	M20x2.5	6-M8x16	M8x60	12	21	35	5	41.5	10	27.5	26
RK-100	100	20	132	115	100	80	30	45	25	72	163	M20x2.5	6-M10x20	M8x75	12	21	35	5	39.5	10	28.5	32
RK-125	125	25	160	140	130	110	35	50	25	82	172	M24x3.0	6-M12x20	M8x85	12	25	45	5	38.5	10	28.5	32
RK-150	150	30	190	170	130	110	45	55	25	95	184	M30x3.5	12-M12x24	M10x100	15.5	32	45	5	37	10	28.5	32
RK-200	200	35	245	220	145	120	55	70	35	115	201	M36x4.0	12-M16x30	M10x125	21	38	60	5	38	6	28.5	28
RK-250	245	60	307	275	220	160	65	85	25	165	255	M42x3.0	12-M20x35	M16x175	28	45	65	12	33	18	6	-

RK-N 中實迴轉油壓缸
ROTATING HYDRAULIC CYLINDER

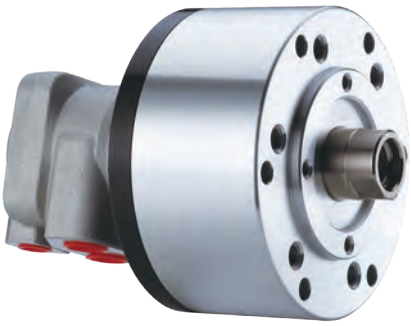

- 短型，高速，輕量型迴轉油壓缸。
- 安裝時可由後端鎖固之。
- For short form, light weight and high speed rotary cylinder.
- Can screw it from the rear end of the cylinder when mounting.

- 洩油孔配管務必單獨接回油壓槽，以避免產生背壓。
- The drain port should be independently connected to oil tank to avoid back pressure.

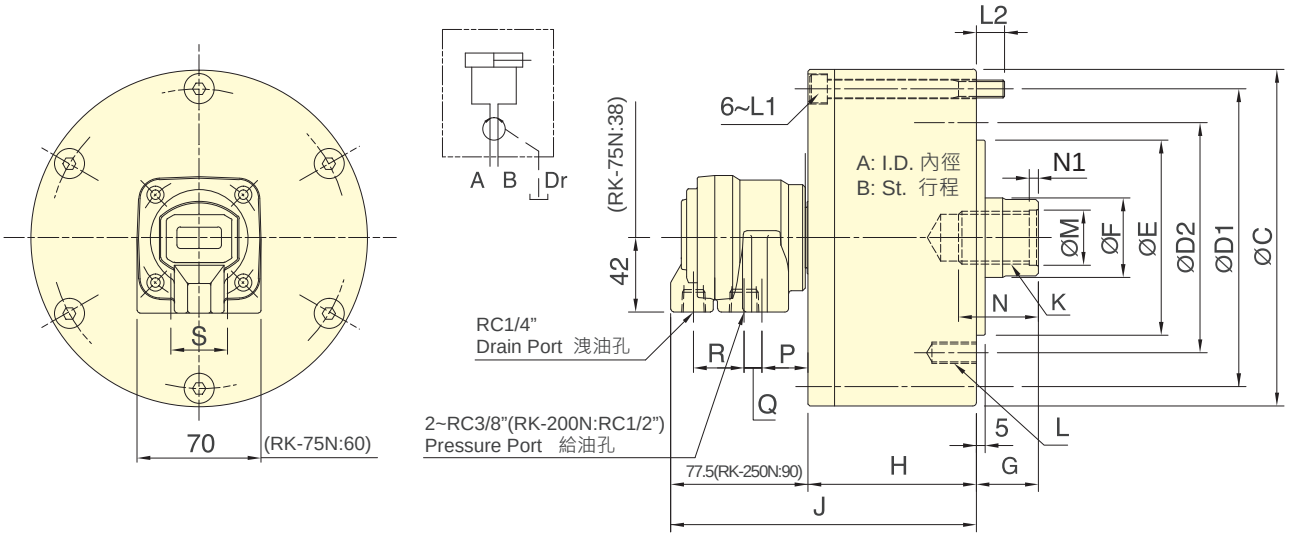

保留規格修改的權利
Subject to technical changes

技術規格 SPECIFICATIONS

型號	活塞面積 Eff. piston area		行程	最高迴轉數	最高使用壓力	I	重量
Model	押側(Extend)	拉側(Retract)	Piston stroke	Max. speed	Max. pressure	Moment of inertia	Weight
	cm^2	cm^2	mm	min^{-1}(r.p.m.)	MPa(kgf/cm^2)	$kg·m^2$	kg
RK-75N	44.2	37.1	15	6000	4.0(40)	0.01	2.8
RK-100N	78.5	71.5	20	6000	4.0(40)	0.03	4.3
RK-125N	122.7	113.1	25	6000	4.0(40)	0.05	6.8
RK-150N	176.7	160.8	30	5500	4.0(40)	0.09	9.4
RK-200N	314.1	290.4	35	5500	4.0(40)	0.28	15.3
RK-250N	469.1	436.0	60	2000	5.0(50)	0.40	45.2

外型尺寸 DIMENSIONS

Model	A	B	C	D1	D2	E (h7)	F	G max.	G min.	H	J	K	L	L1	L2	M (H8)	N	N1	P	Q	R	S
RK-75N	75	15	107	90	90	65	30	45	30	57	134.5	M20x2.5	6~M8x16	M8x60	12	21	35	5	28	10	27.5	26
RK-100N	100	20	132	115	100	80	30	45	25	72	149.5	M20x2.5	6~M10x20	M8x75	12	21	35	5	26	10	28.5	32
RK-125N	125	25	160	140	130	110	35	50	25	82	159.5	M24x3.0	6~M12x20	M8x85	12	25	45	5	26	10	28.5	32
RK-150N	150	30	190	170	130	110	45	55	25	95	172.5	M30x3.5	12~M12x24	M10x100	15.5	32	45	5	26	10	28.5	32
RK-200N	200	35	245	220	145	120	55	70	35	115	192.5	M36x4.0	12~M16x30	M10x125	21	38	60	5	30	6	28.5	28
RK-250N	245	60	307	275	220	160	65	85	25	165	255	M42x3.0	6~M20x2.5	M16x175	28	45	65	12	37	18	6	-

RS 附逆止閥行程控制型迴轉油壓缸
ROTATING HYDRAULIC CYLINDER WITH STROKE CONTROL AND SATETY DEVICE

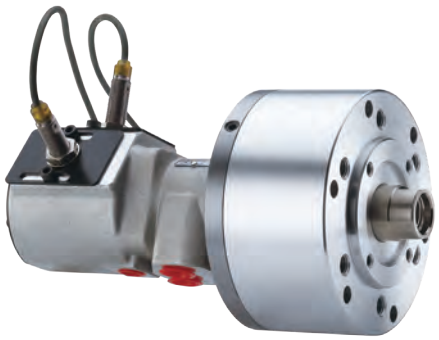

- 短型，高速，行程控制型迴轉油壓缸。
- 感應式近接開關，行程調整容易，可確認油壓缸正確作動。
- 內建逆止閥自鎖機構及壓力洩壓閥。
- 安裝時可由後端鎖固之。
- For short form, high speed and stroke control.
- With proximity sensor , the movement of the position is easy to adjust and confirm when operating.
- Built-in safety check valves and pressure relief valves.
- Can screw it from the rear end of the cylinder when mounting.

- 洩油孔配管務必單獨接回油壓槽，以避免產生背壓。
- 行程檢知機構可修改為線性定位系統機構。(訂製品)
- The drain port should be independently connected to oil tank to avoid back pressure.
- Stroke Detection Type can be customized to Linear Positioning System.

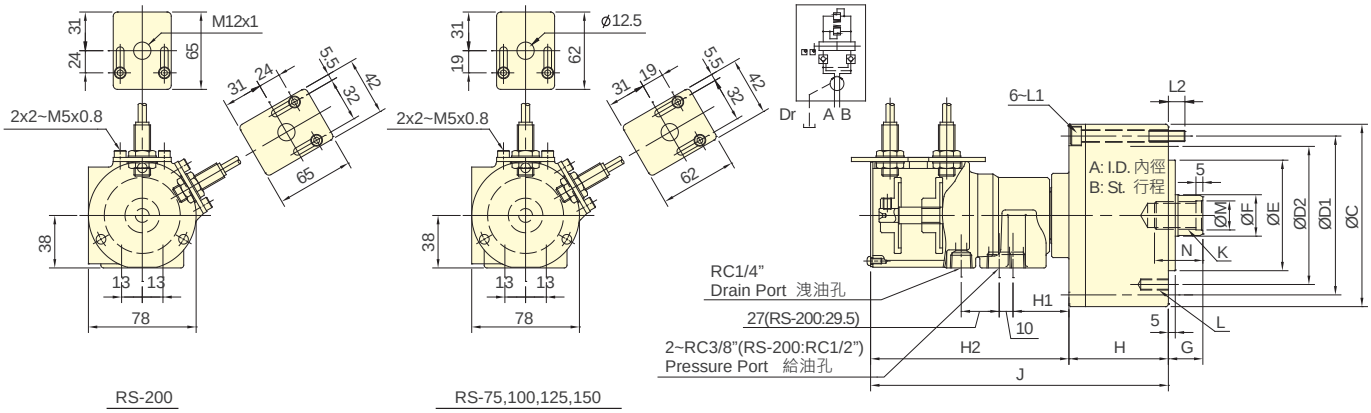

保留規格修改的權利
Subject to technical changes

技術規格 SPECIFICATIONS

型號 Model	活塞面積 Eff. piston area 押側(Extend) cm²	拉側(Retract) cm²	行程 Piston stroke mm	最高迴轉數 Max. speed min⁻¹(r.p.m.)	最高使用壓力 Max. pressure MPa(kgf/cm²)	I Moment of inertia kg·m²	重量 Weight kg
RS-75	43.0	37.1	15	6000	4.0 (40)	0.01	3.4
RS-100	77.4	71.5	20	6000	4.0 (40)	0.04	4.9
RS-125	121.6	113.1	25	6000	4.0 (40)	0.05	7.4
RS-150	175.6	160.8	30	5500	4.0 (40)	0.10	10.7
RS-200	313.0	290.4	35	5500	4.0 (40)	0.29	15.9

外型尺寸 DIMENSIONS

Model	A	B	C	D1	D2	E (h7)	F	G max.	G min.	H	H1	H2	J	K	L	L1	L2	M (H8)	N
RS-75	75	15	107	90	90	65	30	45	30	57	42	145	202	M20x2.5	6~M8x16	M8x60	12	21	35
RS-100	100	20	132	115	100	80	30	45	25	72	42	145	217	M20x2.5	6~M10x20	M8x75	12	21	35
RS-125	125	25	160	140	130	110	35	50	25	82	41	144	226	M24x3.0	6~M12x20	M8x85	12	25	45
RS-150	150	30	190	170	130	110	45	55	25	95	39	142	237	M30x3.5	12~M12x24	M10x100	15.5	32	45
RS-200	200	35	245	220	145	120	55	70	35	115	34	142.5	257.5	M36x4.0	12~M16x30	M10x125	21	38	60

* 近接開關 : DC 10-30V 100mA NPN。*Proximity sensor : DC 10-30V 100mA NPN.

RS-N 行程控制型迴轉油壓缸
ROTATING HYDRAULIC CYLINDER WITH STROKE CONTROL

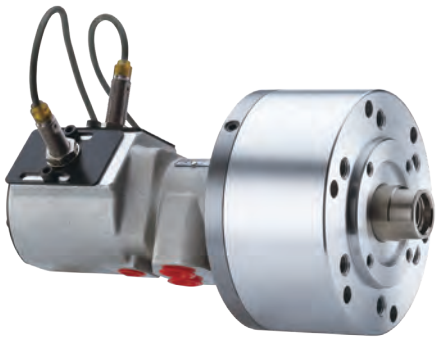

- 短型，高速，行程控制型迴轉油壓缸。
- 感應式近接開關，行程調整容易，可確認油壓缸正確作動。
- 安裝時可由後端鎖固之。
- For short form, high speed and stroke control.
- With proximity sensor , the movement of the position is easy to adjust and confirm when operating.
- Can screw it from the rear end of the cylinder when mounting.

- 洩油孔配管務必單獨接回油壓槽，以避免產生背壓。
- 行程檢知機構可修改為線性定位系統機構。(訂製品)
- The drain port should be independently connected to oil tank to avoid back pressure.
- Stroke Detection Type can be customized to Linear Positioning System.

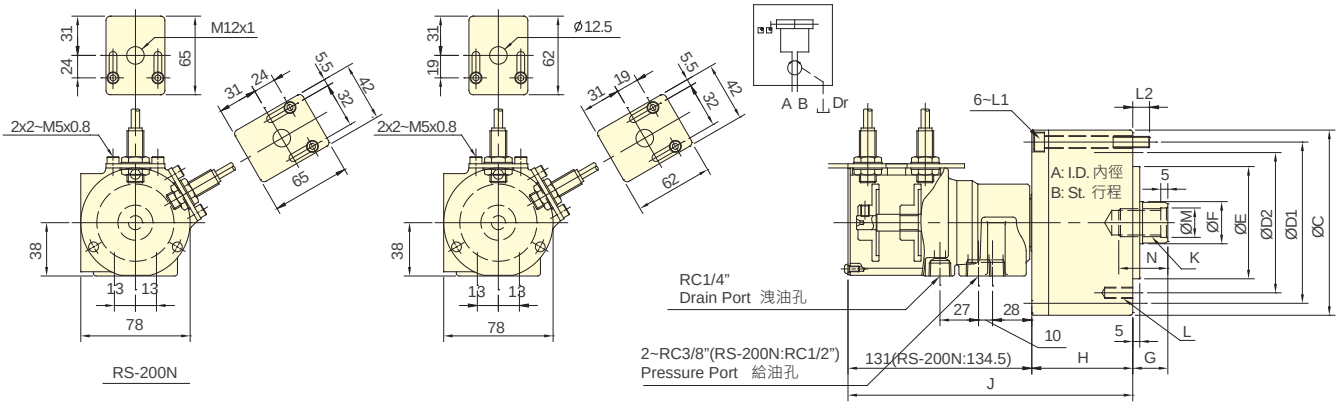

保留規格修改的權利
Subject to technical changes

技術規格 SPECIFICATIONS

型號 Model	活塞面積 Eff. piston area 押側(Extend) cm²	拉側(Retract) cm²	行程 Piston stroke mm	最高迴轉數 Max. speed min⁻¹(r.p.m.)	最高使用壓力 Max. pressure MPa(kgf/cm²)	I Moment of inertia kg·m²	重量 Weight kg
RS-6520N	32.0	28.3	20	6000	4.0(40)	0.01	3.2
RS-6530N	32.0	28.3	30	6000	4.0(40)	0.01	3.3
RS-75N	43.0	37.1	15	6000	4.0(40)	0.01	3.3
RS-7530N	43.0	37.1	30	6000	4.0(40)	0.013	3.7
RS-100N	77.4	71.5	20	6000	4.0(40)	0.04	4.8
RS-125N	121.6	113.1	25	6000	4.0(40)	0.05	7.3
RS-150N	175.6	160.8	30	5500	4.0(40)	0.16	10.6
RS-200N	313.0	290.4	35	5500	4.0(40)	0.29	15.9

外型尺寸 DIMENSIONS

Model	A	B	C	D1	D2	E (h7)	F	G max.	G min.	H	J	K	L	L1	L2	M (H8)	N
RS-6520N	65	20	97	80	80	60	25	45	25	62	193	M16x2.0	6~M8x16	M6x70	14.5	17	30
RS-6530N	65	30	97	80	80	60	25	45	15	62	203	M16x2.0	6~M8x16	M6x80	14.5	17	30
RS-75N	75	15	107	90	90	65	30	45	30	57	188	M20x2.5	6~M8x16	M8x60	12	21	35
RS-7530N	75	30	107	90	90	65	30	45	15	72	203	M20x2.5	6~M8x16	M8x75	12	21	35
RS-100N	100	20	132	115	100	80	30	45	25	72	203	M20x2.5	6~M10x20	M8x75	12	21	35
RS-125N	125	25	160	140	130	110	35	50	25	82	213	M24x3.0	6~M12x20	M8x85	12	25	45
RS-150N	150	30	190	170	130	110	45	55	25	95	226	M30x3.5	12~M12x24	M10x100	15.5	32	45
RS-200N	200	35	245	220	145	120	55	70	35	115	249.5	M36x4.0	12~M16x30	M10x125	21	38	60

* 近接開關 : DC 10-30V 100mA NPN。*Proximity sensor : DC 10-30V 100mA NPN.

RL 附逆止閥注水型迴轉油壓缸
ROTATING HYDRAULIC CYLINDER WITH COOLANT CONNECTION AND SATETY DEVICE

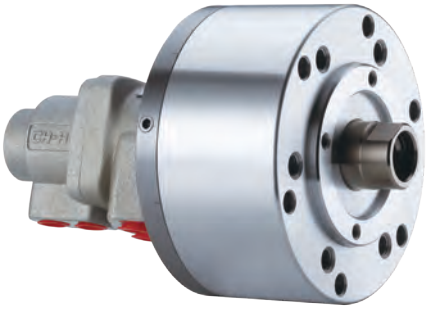

- 高速，注水型迴轉油壓缸。可經由後端供給切削水。
- 內建逆止閥自鎖機構及壓力洩壓閥。
- To allow coolant to be feed from the rear end of the distributor through the rotating union
- Built-in safety check valves and pressure relief valves.

- 洩油孔配管務必單獨接回油壓槽，以避免產生背壓。
- 注水孔無流體通過時，請勿運轉。
- The drain port should be independently connected to oil tank to avoid back pressure.
- The rotary cylinder should not run without liquid through coolant port.

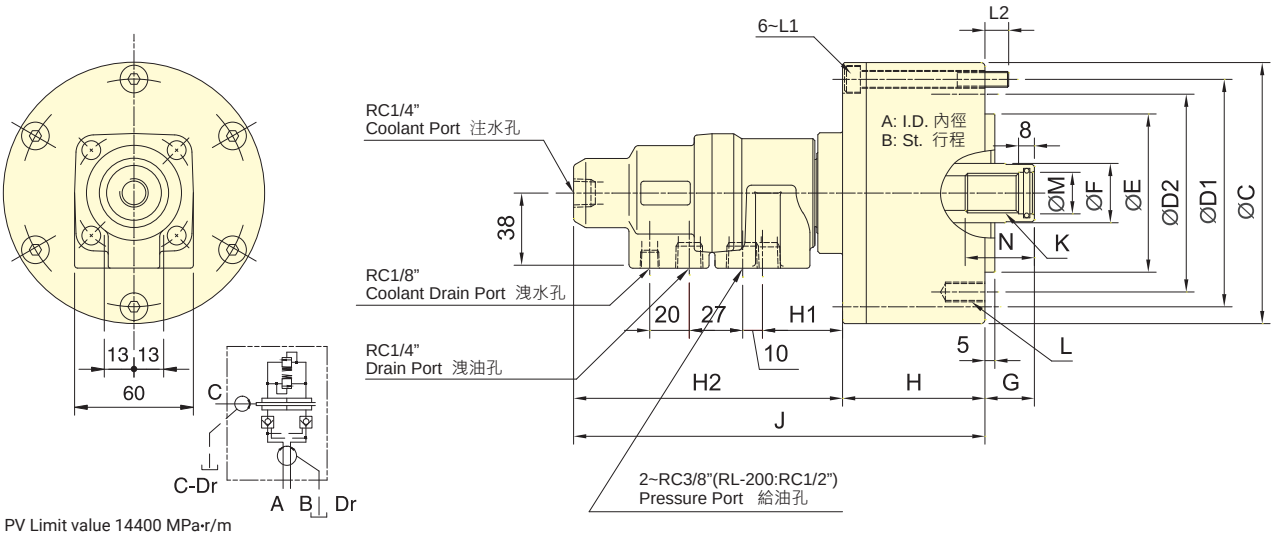

PV Limit value 14400 MPa·r/m
PV 限制值

保留規格修改的權利
Subject to technical changes

技術規格 SPECIFICATIONS

型號	活塞面積 Eff. piston area		行程	最高迴轉數	最高使用壓力	注水孔最高使用壓力	I	重量
Model	押側(Extend)	拉側(Retract)	Piston stroke	Max. speed	Max. pressure	Coolant connection Max. pressure	Moment of inertia	Weight
	cm^2	cm^2	mm	min^{-1}(r.p.m.)	MPa(kgf/cm^2)	MPa (kgf/cm^2)	kg·m^2	kg
RL-75	42.6	37.1	15	6000	4.0(40)	3.5(35)	0.01	3.1
RL-100	77.0	71.5	20	6000	4.0(40)	3.5(35)	0.04	4.6
RL-125	121.2	113.1	25	6000	4.0(40)	3.5(35)	0.06	7.1
RL-150	175.2	160.8	30	5500	4.0(40)	3.5(35)	0.10	9.7
RL-200	312.5	290.4	35	5500	4.0(40)	3.5(35)	0.30	15.6

外型尺寸 DIMENSIONS

Model	A	B	C	D1	D2	E (h7)	F	G max.	G min.	H	H1	H2	J	K	L	L1	L2	M (H8)	N
RL-75	75	15	107	90	90	65	30	45	30	57	42	137	194	M20x2.5	6~M8x16	M8x60	12	21	35
RL-100	100	20	132	115	100	80	30	45	25	72	42	137	209	M20x2.5	6~M10x20	M8x75	12	21	35
RL-125	125	25	160	140	130	110	35	50	25	82	41	136	218	M24x3.0	6~M12x20	M8x85	12	25	45
RL-150	150	30	190	170	130	110	45	55	25	95	39	134	230	M30x3.5	12~M12x24	M10x100	15.5	32	45
RL-200	200	35	245	220	145	120	55	70	35	115	36	132	248	M36x4.0	12~M16x30	M10x125	21	38	60

RL-N 注水型迴轉油壓缸
ROTATING HYDRAULIC CYLINDER WITH COOLANT CONNECTION

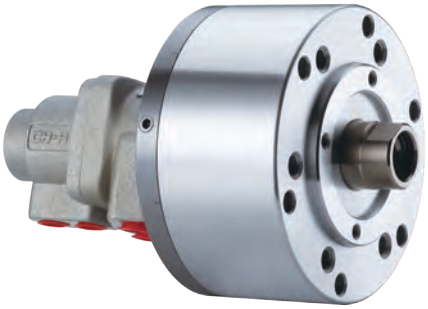

- 高速，注水型迴轉油壓缸。可經由後端供給切削水。
- 安裝時可由後端鎖固之。
- To allow coolant to be feed from the rear end of the distributor through the rotating union.
- Can screw it from the rear end of the cylinder when mounting.

- 洩油孔配管務必單獨接回油壓槽，以避免產生背壓。
- 注水孔無流體通過時，請勿運轉。
- The drain port should be independently connected to oil tank to avoid back pressure.
- The rotary cylinder should not run without liquid through coolant port.

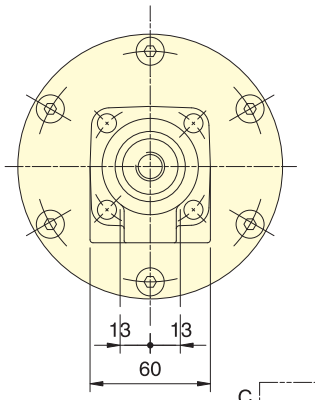

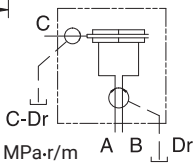

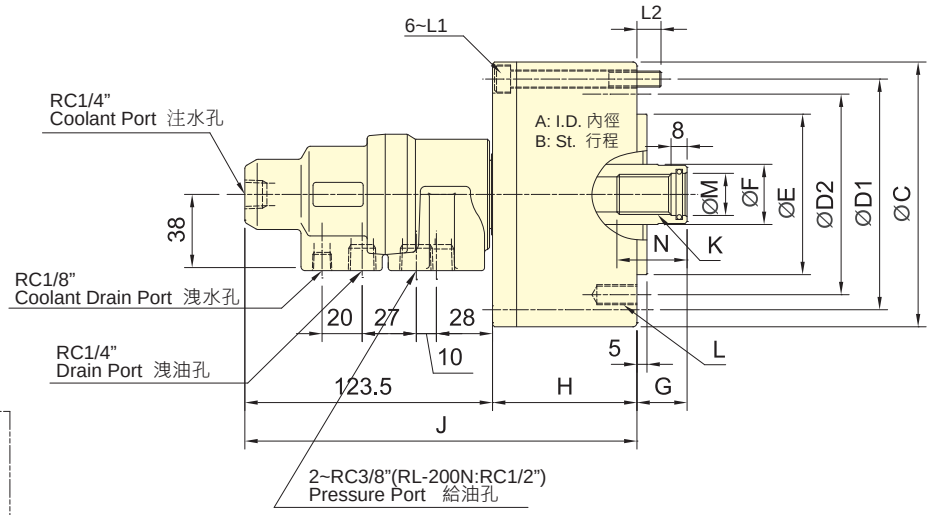

PV Limit value 14400 MPa·r/m
PV 限制值

保留規格修改的權利
Subject to technical changes

技術規格 SPECIFICATIONS

型號 Model	活塞面積 Eff. piston area 押側(Extend) cm²	拉側(Retract) cm²	行程 Piston stroke mm	最高迴轉數 Max. speed min⁻¹(r.p.m.)	最高使用壓力 Max. pressure MPa(kgf/cm²)	注水孔最高使用壓力 Coolant connection Max. pressure MPa (kgf/cm²)	I Moment of inertia kg·m²	重量 Weight kg
RL-75N	42.6	37.1	15	6000	4.0 (40)	3.5(35)	0.01	3.0
RL-100N	77.0	71.5	20	6000	4.0 (40)	3.5(35)	0.04	4.5
RL-125N	121.2	113.1	25	6000	4.0 (40)	3.5(35)	0.06	7.0
RL-150N	175.2	160.8	30	5500	4.0 (40)	3.5(35)	0.10	9.6
RL-200N	312.5	290.4	35	5500	4.0 (40)	3.5(35)	0.29	15.5

外型尺寸 DIMENSIONS

Model	A	B	C	D1	D2	E (h7)	F	G max.	G min.	H	J	K	L	L1	L2	M (H8)	N
RL-75N	75	15	107	90	90	65	30	45	30	57	180	M20x2.5	6-M8x16	M8x60	12	21	35
RL-100N	100	20	132	115	100	80	30	45	25	72	195	M20x2.5	6-M10x20	M8x75	12	21	35
RL-125N	125	25	160	140	130	110	35	50	25	82	205	M24x3.0	6-M12x20	M8x85	12	25	45
RL-150N	150	30	190	170	130	110	45	55	25	95	218	M30x3.5	12-M12x24	M10x100	15.5	32	45
RL-200N	200	35	245	220	145	120	55	70	35	115	240	M36x4.0	12-M16x 30	M10x125	21	38	60

RL-AN 注氣型迴轉油壓缸
ROTATING HYDRAULIC CYLINDER WITH AIR CONNECTION

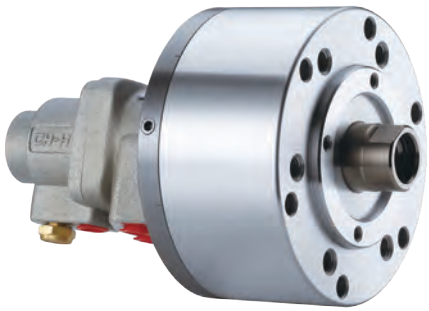

- 高速，注氣型迴轉油壓缸，可經由後端供給空氣。
- 安裝時可由後端鎖固之。
- To allow compressed air to be feed from the rear end of the distributor through the rotating union.
- Can screw it from the rear end of the cylinder when mounting.

- 使用時，請混入微量的油霧。
- 注氣孔無氣體通過時，請勿運轉。
- When used, a little oil mist should be contained.
- The rotary cylinder should not run without air passing through the air port.

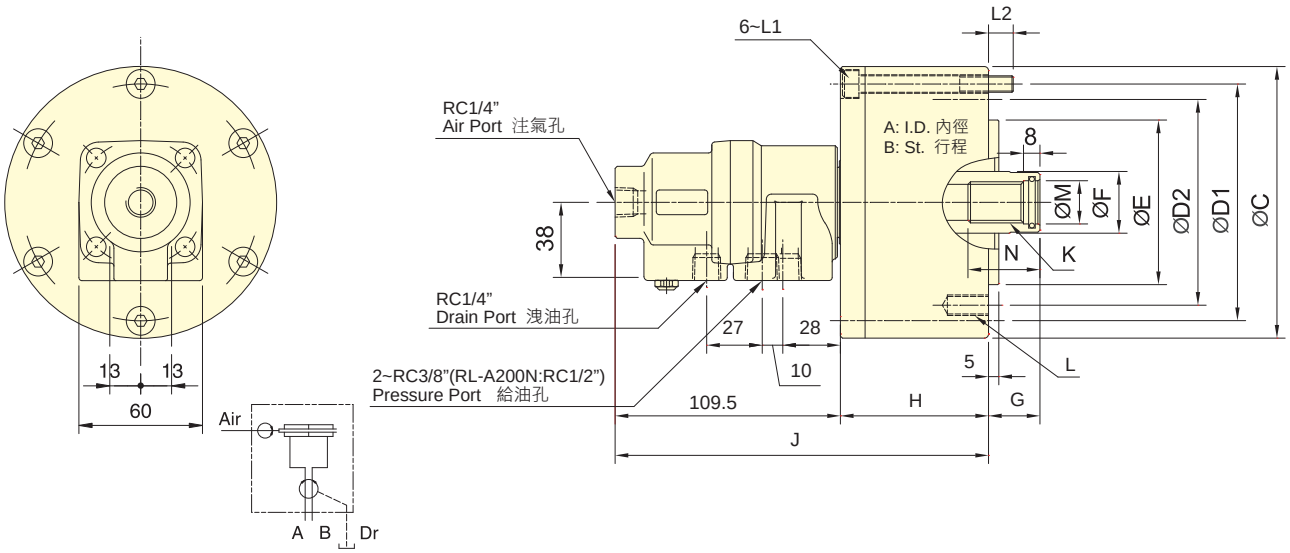

保留規格修改的權利
Subject to technical changes

技術規格 SPECIFICATIONS

型號 Model	活塞面積 Eff. piston area 押側(Extend) cm²	拉側(Retract) cm²	行程 Piston stroke mm	最高迴轉數 Max. speed min⁻¹(r.p.m.)	最高使用壓力 Max. pressure MPa(kgf/cm²)	注氣部最高使用壓力 Air connection Max. pressure MPa (kgf/cm²)	I Moment of inertia kg·m²	重量 Weight kg
RL- A75N	42.6	37.1	15	6000	4.0(40)	0.8(8)	0.01	3.0
RL- A100N	77.0	71.5	20	6000	4.0(40)	0.8(8)	0.04	4.5
RL- A125N	121.2	113.1	25	6000	4.0(40)	0.8(8)	0.06	7.0
RL- A150N	175.2	160.8	30	5500	4.0(40)	0.8(8)	0.10	9.6
RL- A200N	312.5	290.4	35	5500	4.0(40)	0.8(8)	0.29	15.5

外型尺寸 DIMENSIONS

Model	A	B	C	D1	D2	E (h7)	F	G max.	G min.	H	J	K	L	L1	L2	M (H8)	N
RL- A75N	75	15	107	90	90	65	30	45	30	57	166	M20 x2.5	6~M8x 16	M8x60	12	21	35
RL- A100N	100	20	132	115	100	80	30	45	25	72	181	M20 x2.5	6~M10x20	M8x75	12	21	35
RL- A125N	125	25	160	140	130	110	35	50	25	82	191	M24x 3.0	6~M12x20	M8x85	12	25	45
RL- A150N	150	30	190	170	130	110	45	55	25	95	204	M30x3.5	12~M12x24	M10x100	15.5	32	45
RL- A200N	200	35	245	220	145	120	55	70	35	115	225	M36 x4.0	12~M16x30	M10x125	21	38	60

精短整合型中實迴轉油壓缸 (一)

高速輕量型

COMPACT STYLE HYDRAULIC CYLINDER WITH STROKE CONTROL AND SAFETY DEVICE

- 高速，輕量整合型迴轉油壓缸。
- 內建逆止閥自鎖機構，洩壓閥及行程控制近接開關。
- 安裝時可由後端鎖固之。
- For short form, light weight and high speed rotary cylinder.
- Built-in safety check valves, pressure relief valves and proximity sensor.
- Can screw it from the rear end of the cylinder when mounting.

- 洩油孔配管務必單獨接回油壓槽，以避免產生背壓。
- 行程檢知機構可修改為線性定位系統機構。(訂製品)
- The drain port should be independently connected to oil tank to avoid back pressure.
- Stroke Detection Type can be customized to Linear Positioning System.

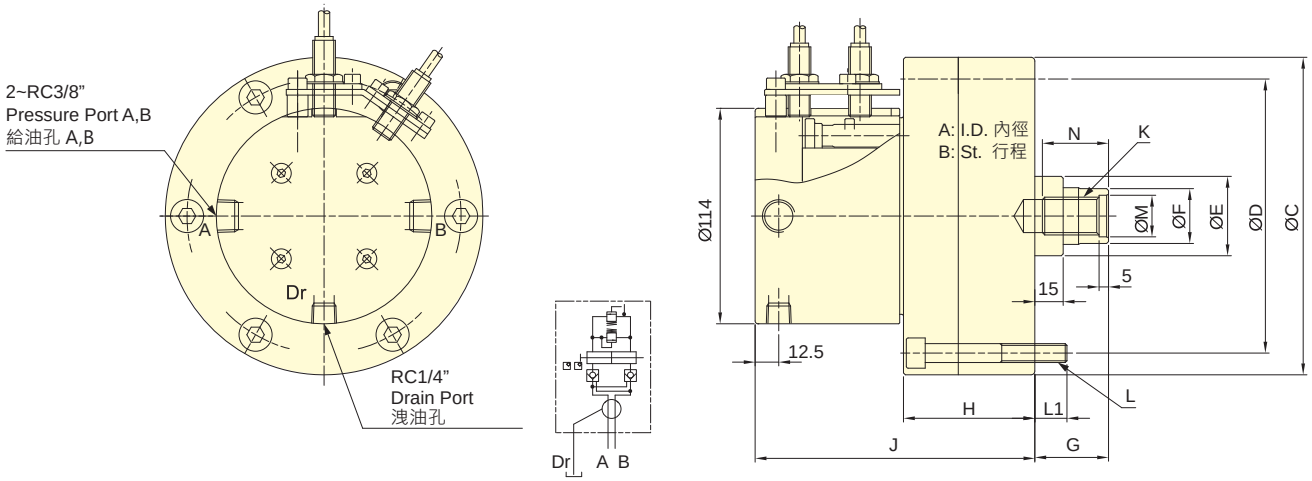

保留規格修改的權利
Subject to technical changes

空油壓迴轉缸

技術規格 SPECIFICATIONS

型號	活塞面積 Eff. piston area		行程	最高迴轉數	最高使用壓力	I	重量
Model	押側(Extend)	拉側(Retract)	Piston stroke	Max. speed	Max. pressure	Moment of inertia	Weight
	cm^2	cm^2	mm	min^{-1}(r.p.m.)	MPa(kgf/cm^2)	$kg{\cdot}m^2$	kg
RE-110	92.7	87.9	20	6000	3.5(35)	0.02	6.9
RE-120	110.8	106	21	6000	4.0(40)	0.03	8.8
RE-130	130.4	123.1	30	6000	4.0(40)	0.03	9.1

外型尺寸 DIMENSIONS

Model	A	B	C (h7)	D	E	F	G max.	G min.	H	J	K	L	L1	M (H8)	N
RE-110	110	20	145	128	42	29	60	40	66	146	M20x2.5	6~M8x70	12	22	35
RE-120	120	21	168	145	42	29	60	39	69.5	148	M20x2.5	6~M10x75	17	22	35
RE-130	130	30	168	150	50	33	60	30	79.5	158	M24x3.0	6~M10x85	17	27	40

* 近接開關 : DC 10-30V 100mA NPN。*Proximity sensor : DC 10-30V 100mA NPN.

精短整合型中實迴轉油壓缸 (二)

高速輕量型

COMPACT STYLE HYDRAULIC CYLINDER WITH STROKE CONTROL AND SAFETY DEVICE

- 高速，輕量整合型迴轉油壓缸，特別適合使用於立式車床。
- 內建逆止閥自鎖機構，洩壓閥及行程控制近接開關。
- 安裝時可由後端鎖固之。
- For short form, light weight and high speed rotary cylinder, suitable for vertical lathe.
- Built-in safety check valves, pressure relief valves and proximity sensor.
- Can screw it from the rear end of the cylinder when mounting.

- 洩油孔配管務必單獨接回油壓槽，以避免產生背壓。
- 行程檢知機構可修改為線性定位系統機構。(訂製品)
- The drain port should be independently connected to oil tank to avoid back pressure.
- Stroke Detection Type can be customized to Linear Positioning System.

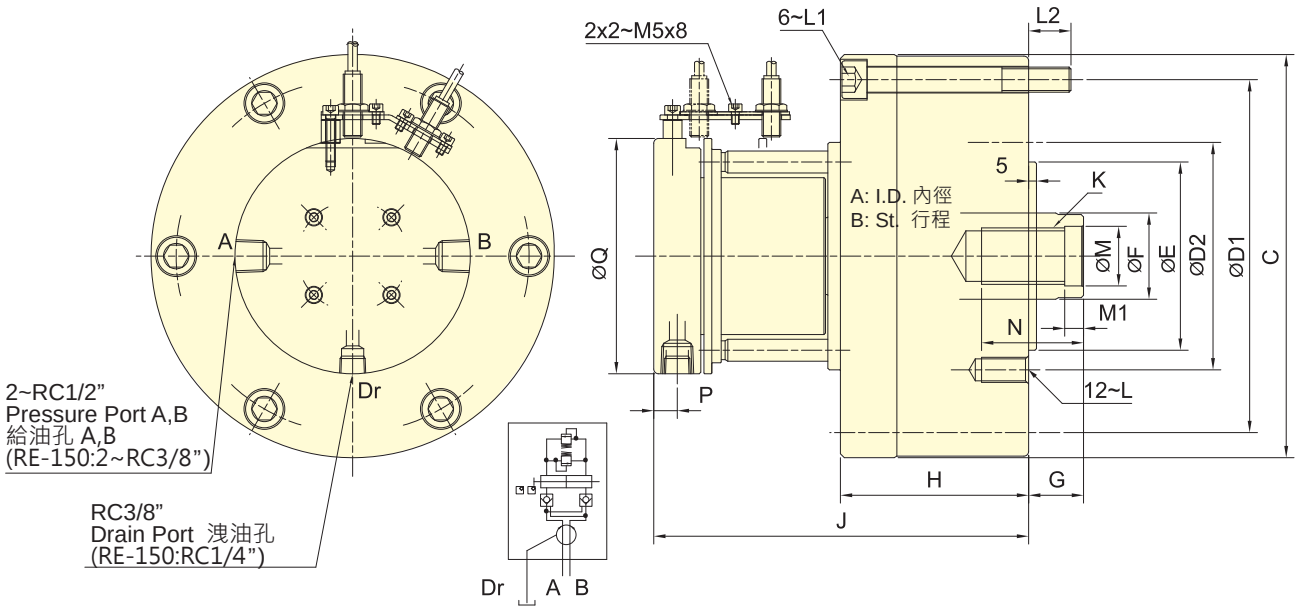

保留規格修改的權利
Subject to technical changes

技術規格 SPECIFICATIONS

型號	活塞面積 Eff. piston area		行程	最高迴轉數	最高使用壓力	I	重量
Model	押側(Extend)	拉側(Retract)	Piston stroke	Max. speed	Max. pressure	Moment of inertia	Weight
	cm^2	cm^2	mm	min^{-1}(r.p.m.)	MPa(kgf/cm^2)	$kg{\cdot}m^2$	kg
RE-150	174.4	160.8	30	5500	4.0 (40)	0.06	14.9
RE-200K	292.4	274.9	35	4000	4.0 (40)	0.19	29.1
RE-200L	292.4	265.4	50	4000	5.0 (50)	0.21	30.4
RE-250	465.2	438.2	60	2000	5.0 (50)	0.43	47.2

外型尺寸 DIMENSIONS

Model	A	B	C	D1	D2	E (h7)	F	G max.	G min.	H	J	K	L	L1	L2	M (H8)	M1	N	P	Q
RE-150	150	30	205	180	130	110	45	60	30	99	177.5	M30x3.5	M12x24	M12x105	18.5	32	10	50	12.5	114
RE-200K	195	35	257	225	145	120	55	73	38	120	239	M36x4.0	M16x30	M16x130	27	38	12	65	15	150
RE-200L	195	50	257	225	170	125	65	80	30	135	254	M42x3.0	M16x30	M16x145	27	45	12	65	15	150
RE-250	245	60	307	275	220	160	65	85	25	165	280	M42x3.0	M20x35	M16x175	28	45	12	65	15	150

* 近接開關 : DC 10-30V 100mA NPN。*Proximity sensor : DC 10-30V 100mA NPN.

精短整合型注氣迴轉油壓缸 (一)

高速輕量型

COMPACT STYLE HYDRAULIC CYLINDER WITH AIR CONNECTION AND SAFETY DEVICE

- 高速，輕量整合型注氣迴轉油壓缸，可經由後端供給空氣。
- 內建逆止閥自鎖機構，洩壓閥及行程控制近接開關。
- 安裝時可由後端鎖固之。
- For short form, light weight and high speed rotary cylinder. To allow compressed air to be feed from the rear end of the distributor through the rotating union.
- Built-in safety check valves, pressure relief valves and proximity sensor.
- Can screw it from the rear end of the cylinder when mounting.

- 洩油孔配管務必單獨接回油壓槽，以避免產生背壓。
- 使用時，請混入微量的油霧。
- 注氣孔無氣體通過時，請勿運轉。
- 行程檢知機構可修改為線性定位系統機構。(訂製品)
- The drain port should be independently connected to oil tank to avoid back pressure.
- When used, a little oil mist should be contained.
- Stroke Detection Type can be customized to Linear Positioning System.
- The rotary cylinder should not run without air passing through the air port.

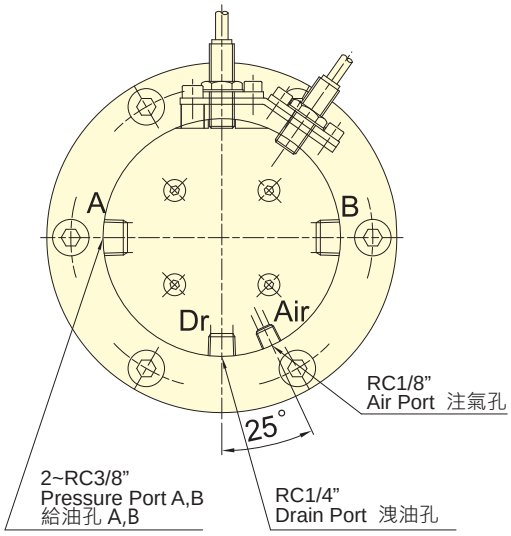

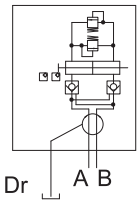

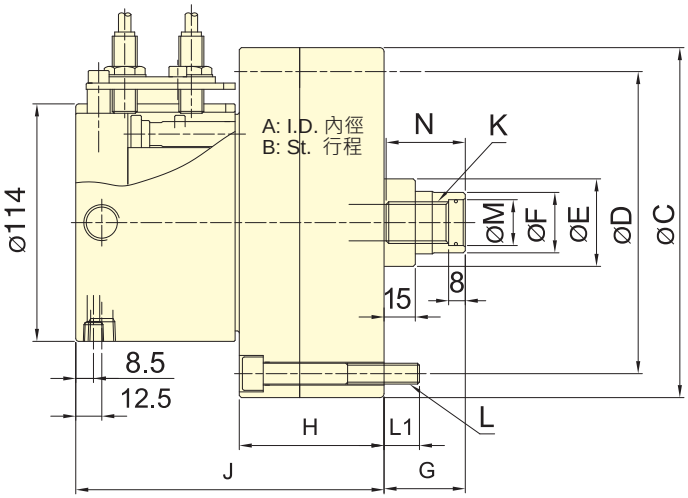

空油壓迴轉缸

保留規格修改的權利
Subject to technical changes

技術規格 SPECIFICATIONS

型號 Model	活塞面積 Eff. piston area 押側(Extend)	拉側(Retract)	行程 Piston stroke	最高迴轉數 Max. speed	最高使用壓力 Max. pressure	注氣部最高使用壓力 Air connection Max. pressure	I Moment of inertia	重量 Weight
	cm^2	cm^2	mm	min^{-1}(r.p.m.)	MPa(kgf/cm^2)	MPa (kgf/cm^2)	$kg{\cdot}m^2$	kg
RE-A110	91.2	87.9	20	6000	4.0(40)	0.8(8)	0.02	6.9
RE-A120	109.3	106	21	6000	4.0(40)	0.8(8)	0.02	8.8
RE-A130	128.9	123.1	30	6000	4.0(40)	0.8(8)	0.03	9.1

外型尺寸 DIMENSIONS

Model	A	B	C (h7)	D	E	F	G max.	G min.	H	J	K	L	L1	M (H8)	N
RE-A110	110	20	145	128	42	29	60	40	66	146	M20x2.5	6~M8x70	12	22	38
RE-A120	120	21	168	145	42	29	60	39	69.5	148	M20x2.5	6~M10x75	17	22	38
RE-A130	130	30	168	150	50	33	60	30	79.5	158	M24x3.0	6~M10x85	17	27	43

* 近接開關 : DC 10-30V 100mA NPN。*Proximity sensor : DC 10-30V 100mA NPN.

RE-A 精短整合型注氣迴轉油壓缸 (二)

COMPACT STYLE HYDRAULIC CYLINDER WITH AIR CONNECTION AND SAFETY DEVICE

- 高速，輕量整合型注氣迴轉油壓缸，可經由後端供給空氣。
- 內建逆止閥自鎖機構，洩壓閥及行程控制近接開關。
- 安裝時可由後端鎖固之。
- For short form, light weight and high speed rotary cylinder. To allow compressed air to be feed from the rear end of the distributor through the rotating union.
- Built-in safety check valves, pressure relief valves and proximity sensor.
- Can screw it from the rear end of the cylinder when mounting.

- 洩油孔配管務必單獨接回油壓槽，以避免產生背壓。
- 使用時，請混入微量的油霧。
- 注氣孔無氣體通過時，請勿運轉。
- 行程檢知機構可修改為線性定位系統機構。(訂製品)
- The drain port should be independently connected to oil tank to avoid back pressure.
- When used, a little oil mist should be contained.
- Stroke Detection Type can be customized to Linear Positioning System.
- The rotary cylinder should not run without air passing through the air port.

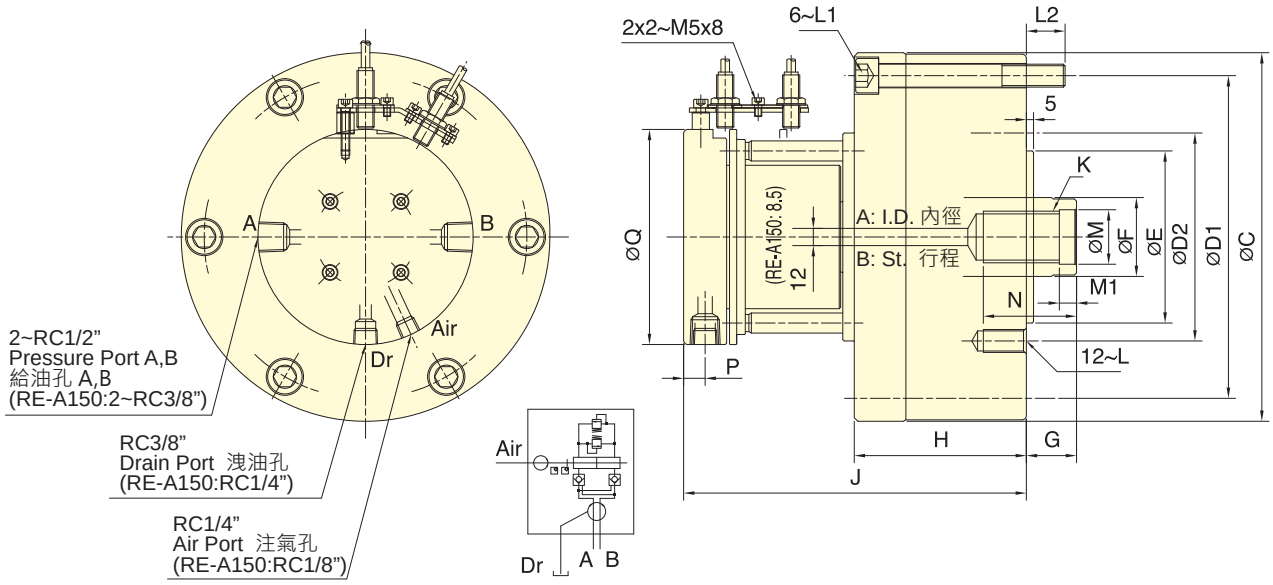

保留規格修改的權利
Subject to technical changes

技術規格 SPECIFICATIONS

型號 Model	活塞面積 Eff. piston area 押側(Extend) cm²	拉側(Retract) cm²	行程 Piston stroke mm	最高迴轉數 Max. speed min⁻¹(r.p.m.)	最高使用壓力 Max. pressure MPa(kgf/cm²)	注氣部最高使用壓力 Air connection Max. pressure MPa (kgf/cm²)	I Moment of inertia kg·m²	重量 Weight kg
RE-A150	174.4	160.8	30	5500	4.0(40)	0.8(8)	0.06	14.9
RE-A200K	292.4	274.9	35	4000	4.0(40)	0.8(8)	0.19	29.1
RE-A200L	292.4	265.4	50	4000	5.0(50)	0.8(8)	0.21	30.4
RE-A250	465.2	438.2	60	2000	5.0(50)	0.8(8)	0.43	47.2

外型尺寸 DIMENSIONS

Model	A	B	C	D1	D2	E (h7)	F	G max.	G min.	H	J	K	L	L1	L2	M (H8)	M1	N	P	Q
RE-A150	150	30	205	180	130	110	45	60	30	99	177.5	M30x3.5	M12x24	M12x105	18.5	32	10	50	12.5	114
RE-A200K	195	35	257	225	145	120	55	73	38	120	239	M36x4.0	M16x30	M16x130	27	38	12	65	15	150
RE-A200L	195	50	257	225	170	125	65	80	30	135	254	M42x3.0	M16x30	M16x145	27	45	12	65	15	150
RE-A250	245	60	307	275	220	160	65	85	25	165	280	M42x3.0	M20x35	M16x175	28	45	12	65	15	150

* 近接開關 : DC 10-30V 100mA NPN。*Proximity sensor : DC 10-30V 100mA NPN.

RE-L 精短整合型注水迴轉油壓缸 (一)
COMPACT STYLE HYDRAULIC CYLINDER WITH COOLANT CONNECTION AND SAFETY DEVICE

- 高速，輕量整合型注水迴轉油壓缸，可經由後端供給切削水。
- 內建逆止閥自鎖機構，洩壓閥及行程控制近接開關。
- 安裝時可由後端鎖固之。
- For short form, light weight and high speed rotary cylinder. To allow coolant to be feed from the rear end of the distributor through the rotating union.
- Built-in safety check valves, pressure relief valves and proximity sensor.
- Can screw it from the rear end of the cylinder when mounting.

- 洩油孔配管務必單獨接回油壓槽，以避免產生背壓。
- 注水孔無流體通過時，請勿運轉。
- 行程檢知機構可修改為線性定位系統機構。(訂製品)
- The drain port should be independently connected to oil tank to avoid back pressure.
- The rotary cylinder should not run without liquid through coolant port.
- Stroke Detection Type can be customized to Linear Positioning System.

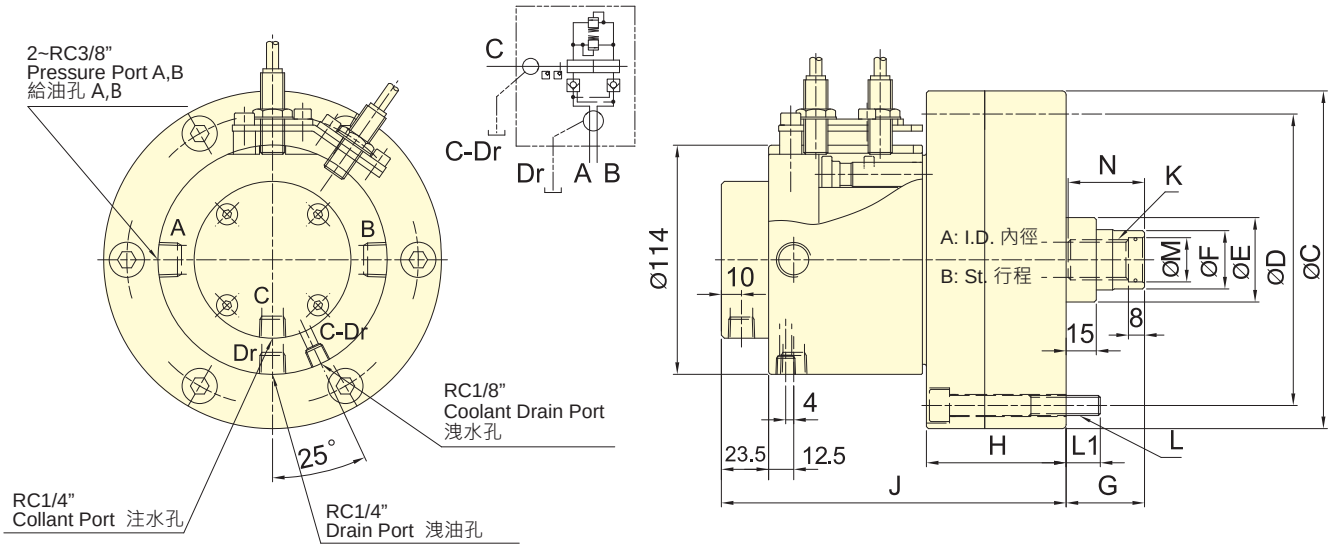

保留規格修改的權利
Subject to technical changes

技術規格 SPECIFICATIONS

型號 Model	活塞面積 Eff. piston area 押側(Extend) cm²	拉側(Retract) cm²	行程 Piston stroke mm	最高迴轉數 Max. speed min⁻¹(r.p.m.)	最高使用壓力 Max. pressure MPa(kgf/cm²)	注水孔最高使用壓力 Coolant connection Max. pressure MPa (kgf/cm²)	I Moment of inertia kg·m²	重量 Weight kg
RE-L110	92.7	87.9	20	6000	4.0(40)	1.5(15)	0.02	7.2
RE-L120	109.3	106	21	6000	4.0(40)	1.5(15)	0.03	9.1
RE-L130	128.9	123.1	30	6000	4.0(40)	1.5(15)	0.03	9.5

外型尺寸 DIMENSIONS

Model	A	B	C (h7)	D	E	F	G max.	G min.	H	J	K	L	L1	M (H8)	N
RE-L110	110	20	145	128	42	29	60	40	66	169.5	M20x2.5	6~M8x70	12	22	38
RE-L120	120	21	168	145	42	29	60	39	69.5	171.5	M20x2.5	6~M10x75	17	22	38
RE-L130	130	30	168	150	50	33	60	30	79.5	181.5	M24x3.0	6~M10x85	17	27	43

* 近接開關 : DC 10-30V 100mA NPN。*Proximity sensor : DC 10-30V 100mA NPN.

RE-L 精短整合型注水迴轉油壓缸 (二)

COMPACT STYLE HYDRAULIC CYLINDER WITH COOLANT CONNECTION AND SAFETY DEVICE

- 高速，輕量整合型注水迴轉油壓缸，可經由後端供給切削水，特別適合使用於立式車床。
- 內建逆止閥自鎖機構，洩壓閥及行程控制近接開關。
- 安裝時可由後端鎖固之。
- For short form, light weight and high speed rotary cylinder. To allow coolant to be feed from the rear end of the distributor through the rotating union, suitable for vertical lathe.
- Built-in safety check valves, pressure relief valves and proximity sensor.
- Can screw it from the rear end of the cylinder when mounting.

- 洩油孔配管務必單獨接回油壓槽，以避免產生背壓。
- 注水孔無流體通過時，請勿運轉。
- 行程檢知機構可修改為線性定位系統機構。(訂製品)
- The drain port should be independently connected to oil tank to avoid back pressure.
- The rotary cylinder should not run without liquid through coolant port.
- Stroke Detection Type can be customized to Linear Positioning System.

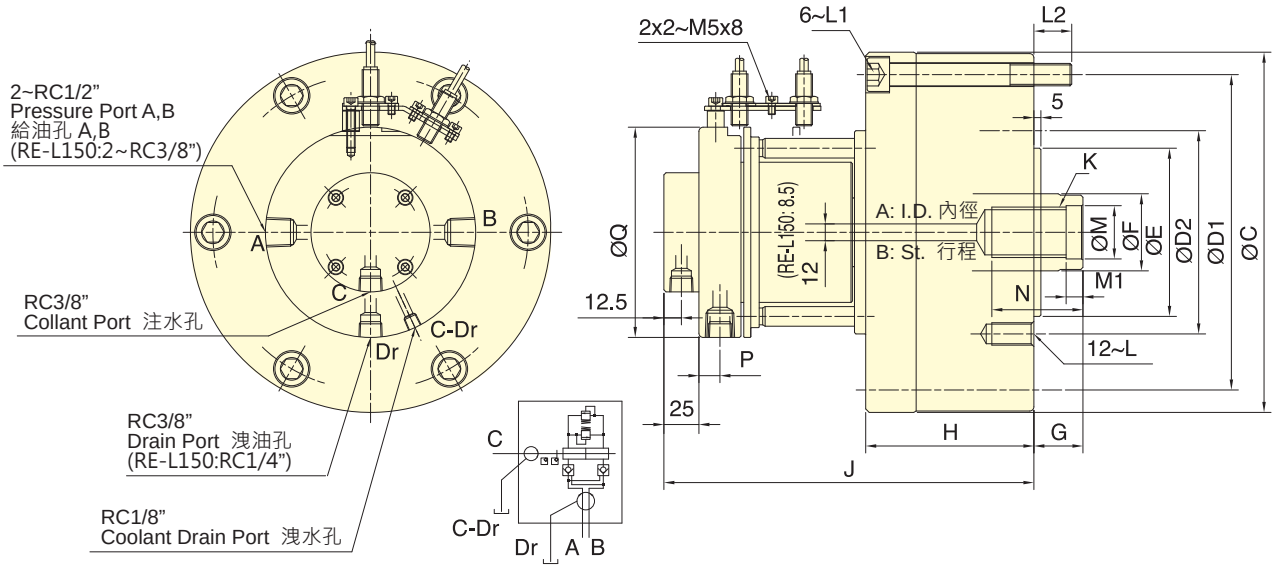

保留規格修改的權利
Subject to technical changes

技術規格 SPECIFICATIONS

型號 Model	活塞面積 Eff. piston area 押側(Extend) cm²	拉側(Retract) cm²	行程 Piston stroke mm	最高迴轉數 Max. speed min⁻¹(r.p.m.)	最高使用壓力 Max. pressure MPa(kgf/cm²)	注水孔最高使用壓力 Coolant connection Max. pressure MPa (kgf/cm²)	I Moment of inertia kg·m²	重量 Weight kg
RE-L150	174.4	160.8	30	5500	4.0(40)	1.5(15)	0.06	15.2
RE-L200K	292.4	274.9	35	4000	4.0(40)	1.5(15)	0.19	29.4
RE-L200L	292.4	265.4	50	4000	5.0(50)	1.5(15)	0.21	30.7
RE-L250	465.2	438.2	60	2000	5.0(50)	1.5(15)	0.43	47.5

外型尺寸 DIMENSIONS

Model	A	B	C	D1	D2	E (h7)	F	G max.	G min.	H	J	K	L	L1	L2	M (H8)	M1	N	P	Q
RE-L150	150	30	205	180	130	110	45	60	30	99	201	M30x3.5	M12x24	M12x105	18.5	32	10	50	12.5	114
RE-L200K	195	35	257	225	145	120	55	73	38	120	264	M36x4.0	M16x30	M16x130	27	38	12	65	15	150
RE-L200L	195	50	257	225	170	125	65	80	30	135	279	M42x3.0	M16x30	M16x145	27	45	12	65	15	150
RE-L250	245	60	307	275	220	160	65	85	25	165	305	M42x3.0	M20x35	M16x175	28	45	12	65	15	150

* 近接開關 : DC 10-30V 100mA NPN。*Proximity sensor : DC 10-30V 100mA NPN.

RC 迴轉接頭外接型迴轉油壓缸
HYDRAULIC CYLINDER WITH ROTATING JOINT

- 中心帶通道油壓缸。
- 可外接單通道或雙通道迴轉接頭，同時滿足氣密檢測及中心出水的需求。
- 內建逆止閥自鎖機構。
- 可搭配近接開關或線性位移感測器進行行程控制。

- Center through-hole hydraulic cylinder, suitable for horizontal CNC lathes.
- Can choose an external rotary joint with either single or double paths.
- It meets the demand for coolant through spindle and airtight pressure detect function.
- Has a buil-in check valve for safety.
- Stroke control via proximity switch or linear positioning system.

- 近接開關及外接單通道或雙通道迴轉接頭為選購品。
- The proximity switch and single or double paths rotating joint are optional.

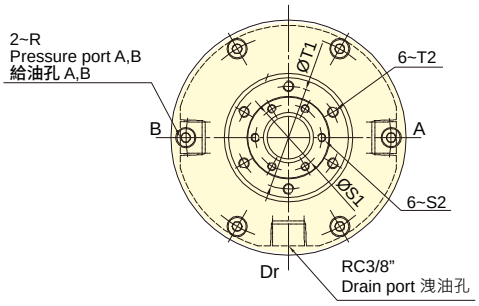

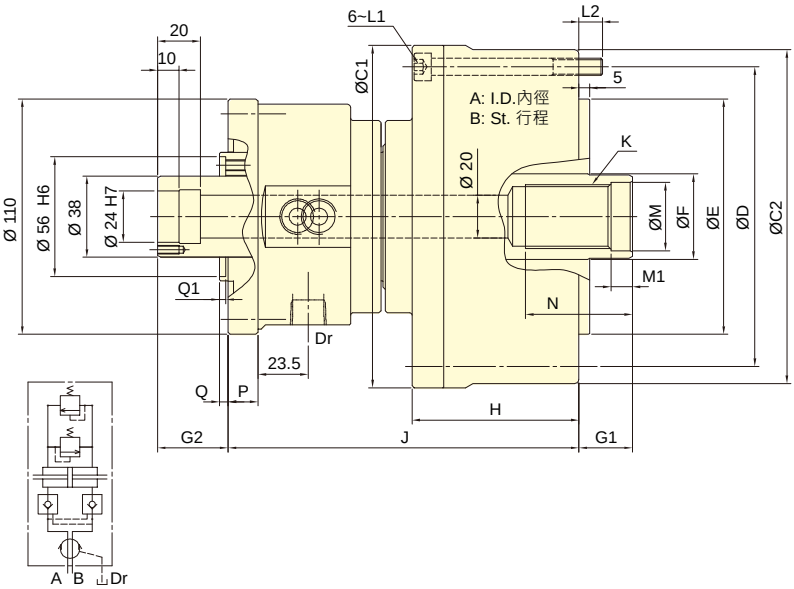

保留規格修改的權利
Subject to technical changes

技術規格 SPECIFICATIONS

型號	活塞面積 Eff. piston area		行程	最高迴轉數	最高使用壓力	I	重量
Model	押側(Extend)	拉側(Retract)	Piston stroke	Max. speed	Max. pressure	Moment of inertia	Weight
	cm^2	cm^2	mm	min^{-1}(r.p.m.)	MPa(kgf/cm^2)	$kg·m^2$	kg
RC-85	43.8	48.1	20	5000	3.5(35)	0.01	6.8
RC-100	65.6	64.4	20	5000	3.5(35)	0.02	9.2
RC-125	109.8	108.5	25	5000	3.5(35)	0.03	11.1
RC-145	152.2	143.9	30	5000	3.5(35)	0.03	14.6
RC-200	279.3	273.6	35	4000	4.0(40)	0.26	35.5

外型尺寸 DIMENSIONS

Model	A	B	C1	C2	D	E (h7)	F	G1max.	G1min.	G2max.	G2min.	H	J	K
RC-85	85	20	120	116	100	65	30	45	25	28	8	70	150	M20x1.5
RC-100	100	20	135	131	115	80	40	45	25	28	8	72	158.5	M30x1.5
RC-125	125	25	160	156	140	110	40	50	25	33	8	78	164	M30x1.5
RC-145	145	30	187	183	165	110	50	55	25	38	8	89.5	169.5	M40x1.5
RC-200	195	35	257	257	225	120	55	73	38	51.5	16.5	120	222.5	M36x4.0

Model	L1	L2	M(H8)	M1	N	P	Q	Q1	R	S1	S2	T1	T2
RC-85	6~M8x75	12.5	20.5	10	40	14	4	3	RC3/8	31	M4x10	48	M5x9
RC-100	6~M8x75	12.5	32	10	50	14	4	3	RC3/8	31	M4x10	48	M5x9
RC-125	6~M8x80	11	32	10	50	14	4	3	RC3/8	31	M4x10	48	M5x9
RC-145	6~M10x90	18	42	12	57	14	4	3	RC3/8	31	M4x10	48	M5x9
RC-200	6~M16x130	26	38	12	65	15	6.5	4	RC1/2	35	M4x10	60	M5x11

- 迴轉接頭和近接開關安裝型式。
- Rotating joint and Proximity switch with bracket type.

F1

固定式，單通道
With single path rotating joint (Fixed type)

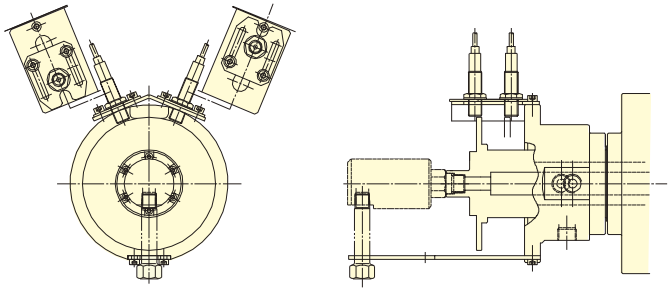

F2

固定式，雙通道
With double paths rotating joint(Fixed type)

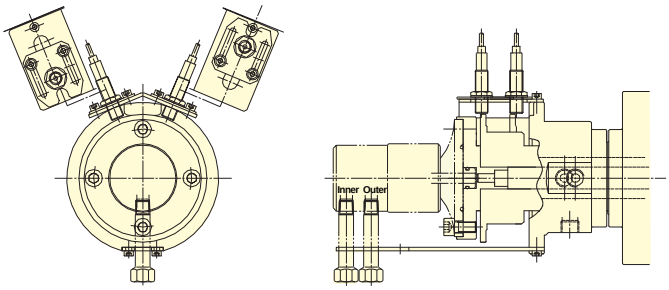

M1

移動式，單通道
With single path rotating joint(Moving type)

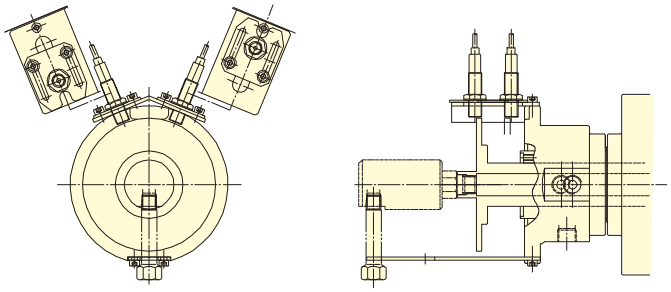

M2

移動式，雙通道
With double paths rotating joint(Moving type)

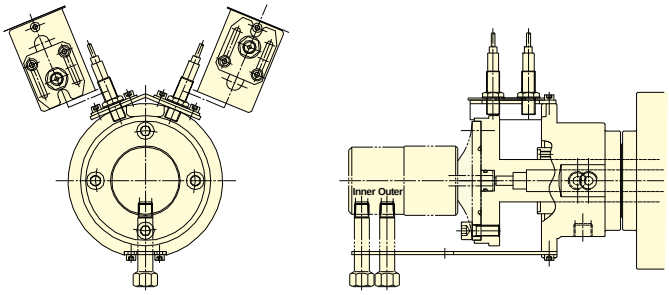

B

線性檢知和支架
linear Sensor with bracket

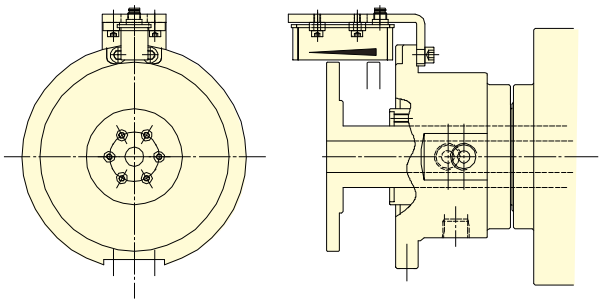

S

近接開關和支架
Proximity switch with bracket

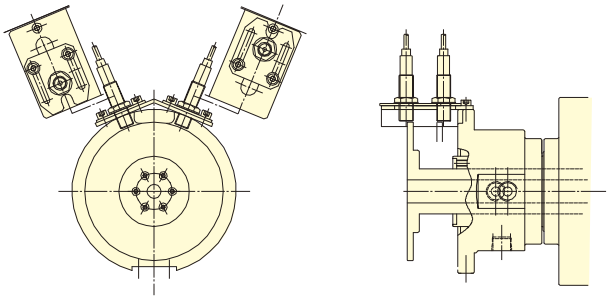

* 近接開關與迴轉接頭是選購品。
* 可選擇所合適的附加類型。
* 詳細安裝介面尺寸請與聯繫我們。

* The proximity switch and rotary joiint are optional.
* Choose and attach the appropriate type.
* Please contact AUTOGRIP for more detailed drawing.

附逆止閥雙桿型迴轉油壓缸
DOUBLE ROD ROTATING CYLINDER WITH SAFETY DEVICE

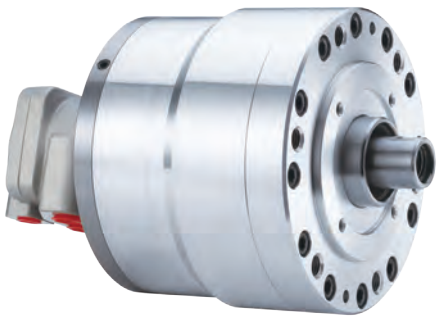

- 短型，輕量，雙桿型迴轉油壓缸。
- 內建逆止閥自鎖機構及壓力洩壓閥。
- For short form, light weight, double rod rotary cylinder.
- Built-in safety check valves and pressure relief valves.

- 洩油孔配管務必單獨接回油壓槽，以避免產生背壓。
- The drain port should be independently connected to oil tank to avoid back pressure.

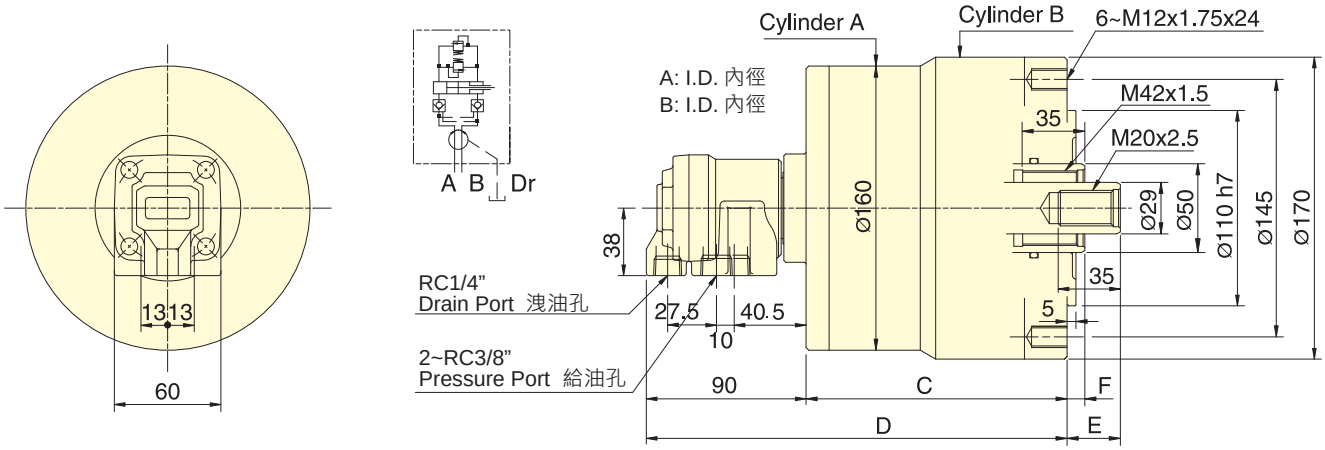

保留規格修改的權利
Subject to technical changes

技術規格 SPECIFICATIONS

型號	活塞面積Eff. piston area				行程	最高迴轉數	最高使用壓力	I	重量
	押側(Extend)		拉側(Retract)						
Model	A	B	A	B	Piston stroke	Max. speed	Max. pressure	Moment of inertia	Weight
	cm^2	cm^2	cm^2	cm^2	mm	min^{-1}(r.p.m.)	MPa(kgf/cm^2)	$kg{\cdot}m^2$	kg
RD-120	122.7	126.1	116.1	113.1	20	5000	3.0(30)	0.14	11.3
RD-125	122.7	126.1	116.1	113.1	25	5000	3.0(30)	0.15	11.5

外型尺寸 DIMENSIONS

Model	A	B	C	D	E max.	E min.	F max.	F min.
RD-120	125	130	137	227	60	40	35	15
RD-125	125	130	147	237	55	30	35	10

RD-N 雙桿型迴轉油壓缸
DOUBLE ROD ROTATING CYLINDER

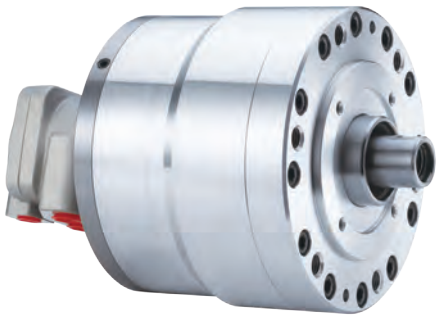

- 短型，輕量，雙桿型迴轉油壓缸。
- For short form, light weight, double rod rotary cylinder.

- 洩油孔配管務必單獨接回油壓槽，以避免產生背壓。
- The drain port should be independently connected to oil tank to avoid back pressure.

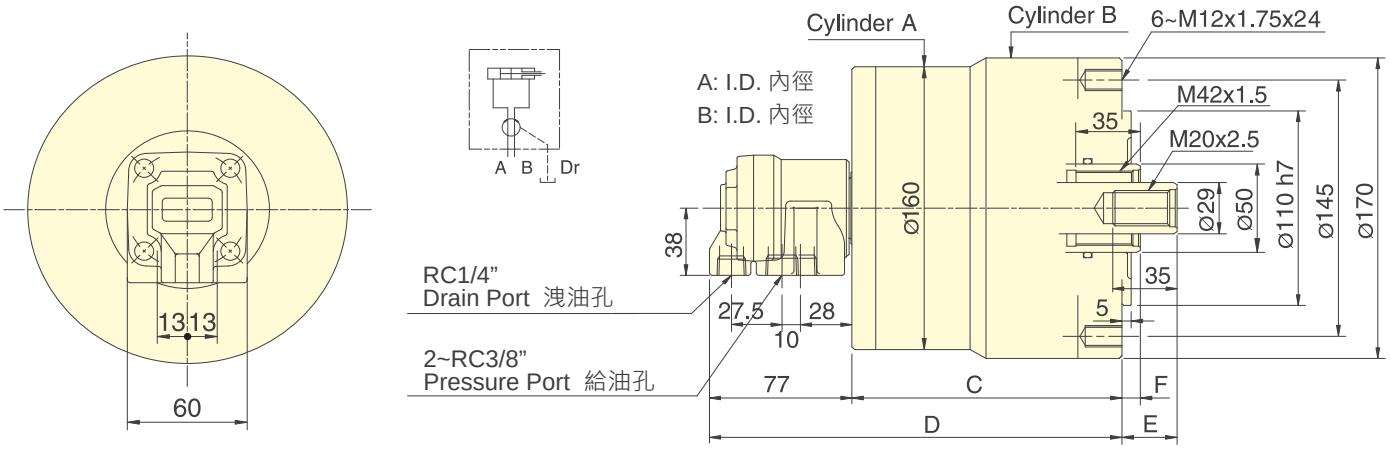

保留規格修改的權利
Subject to technical changes

技術規格 SPECIFICATIONS

型號	活塞面積Eff. piston area				行程	最高迴轉數	最高使用壓力	I	重量
	押側(Extend)		拉側(Retract)						
Model	A	B	A	B	Piston stroke	Max. speed	Max. pressure	Moment of inertia	Weight
	cm^2	cm^2	cm^2	cm^2	mm	min^{-1}(r.p.m.)	MPa(kgf/cm^2)	$kg·m^2$	kg
RD-120N	122.7	126.1	116.1	113.1	20	5000	3.0(30)	0.14	11.2
RD-125N	122.7	126.1	116.1	113.1	25	5000	3.0(30)	0.15	11.4

外型尺寸 DIMENSIONS

Model	A	B	C	D	E max.	E min.	F max.	F min.
RD-120N	125	130	137	214	60	40	35	15
RD-125N	125	130	147	224	55	30	35	10

RV 油壓迴轉分流閥
HYDRAULIC ROTARY VALVE

油壓型

- 迴轉工作台上夾治具空油壓缸用迴轉分流閥。
- 迴轉閥內部經特殊設計，使得迴轉軸可輕力轉動，且不虞漏油。
- I型為一迴路，同時控制開夾動作。
- II型為二迴路，可分別控制開夾動作。

- Rotary valve is used for clamping cylinder on rotary table.
- Through unique design, it can make the rotary housing be rotated light force and is free from oil leaking.
- I Type is a single circuit which controls the clamping.
- II Type is a double circuit which separately controls the clamping.

- RV 型式的洩油孔配管務必單獨接回油槽，以避免產品背壓。
- The drain port of RV type should be independently connected to oil tank to avoid back pressure.

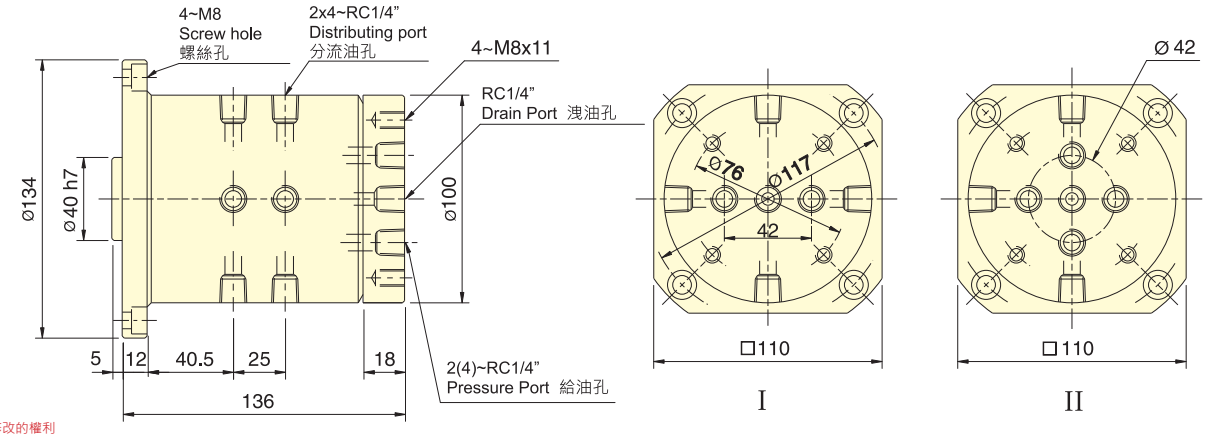

保留規格修改的權利
Subject to technical changes

技術規格 SPECIFICATIONS

型號	分流數	最高使用壓力	重量
Model	Distributing	Max. pressure	Weight
		MPa(kgf/cm²)	kgs
RV-31H	4 向 (可訂製)	4.0(40)	7.4

註 :RV 可提供客製。(Note:RV can be custom-made.)

RV-A 空壓迴轉分流閥
AIR ROTARY VALVE

空壓型

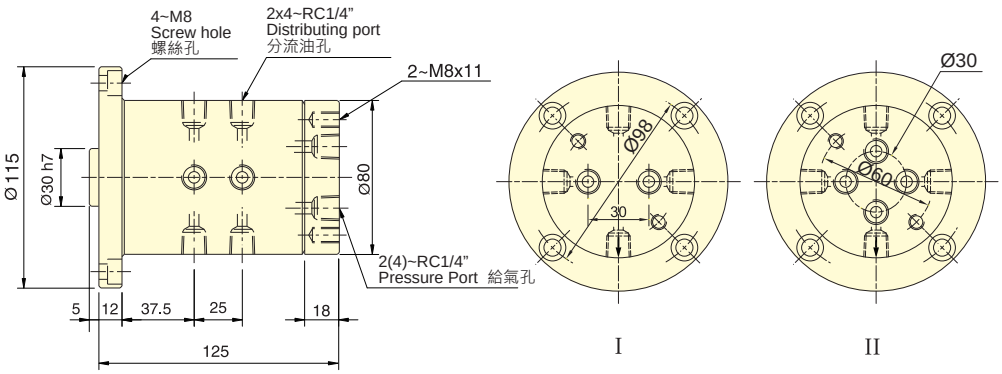

保留規格修改的權利
Subject to technical changes

技術規格 SPECIFICATIONS

型號	分流數	最高使用壓力	重量
Model	Distributing	Max. pressure	Weight
		MPa(kgf/cm²)	kgs
RV-A31H	4 向 (可訂製)	0.8(8)	4.8

註 :RV-A 可提供客製。(Note:RV-A can be custom-made.)

RJ-80 冷卻液迴轉接頭
COOLANT ROTATING JOINT

- 高轉速，高壓力用冷卻液迴轉接頭。
- 內部止水閥使用超硬合金及精密陶瓷相配對，耐磨耗特性佳。
- Coolant joint for high speed, high pressure. Usable for oil and water-soluble coolant.
- Seal bushing inside is made of cemented carbide and ceramics, which provide higher wear-resistance.

- 注水部無流體通過時，請勿運轉。
- The joint should not run without liquid through coolant port.

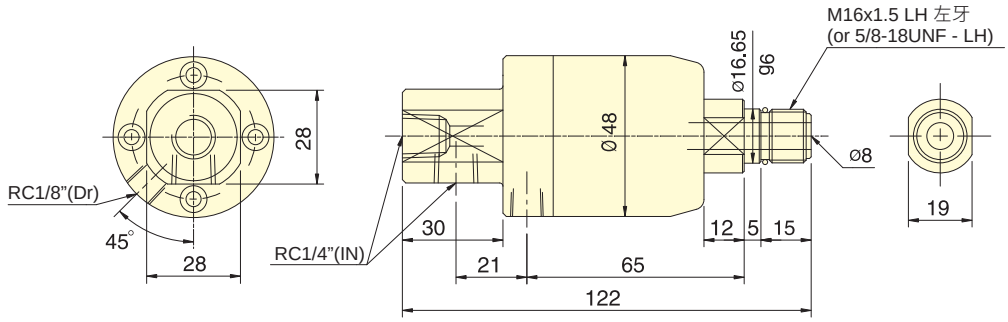

保留規格修改的權利 Subject to technical changes

技術規格 SPECIFICATIONS

型號	PV限制值 MPa· r/m	最高使用壓力MPa(kgf/cm²)	吐出量 (使用壓力 50 kgf/cm²)	最高使用迴轉數(r.p.m.)	重量(kg)
Model	PV Limit value MPa· r/m	Max. pressure MPa(kgf/cm²)	Delivery amount (at 50 kgf/cm²)	Max. speed (r.p.m.)	Weight (kg)
RJ-80	14400	6.0(60)	28 l/min	8000	0.5

RJ-92 冷卻液迴轉接頭內附止水閥自動開閉機構
COOLANT ROTATING JOINT WITH AUTOMATIC ON/OFF SEAL

- 外型長度精短，重量輕巧。
- 高轉數，高壓力用冷卻液迴轉接頭。
- 內部止水閥使用超硬合金及精密陶瓷相配對，耐磨耗性特佳。
- 運轉時如無流體通過，則止水閥自動脫離，使止水閥不致乾磨而損壞。
- Short form, light weight coolant rotating joint.
- Coolant joint for high speed, high pressure.Usable for oil and water-soluble coolant.
- Seal bushing inside is made of cemented carbide and ceramics,which provide higher wear-resistance.
- The seal will depart automatically if no liquid passes during,operation, and will not be dmaged due to dry touching.

- 最小啟動壓力 4kgf/cm²。
- Min. pressure is 4kgf/cm².

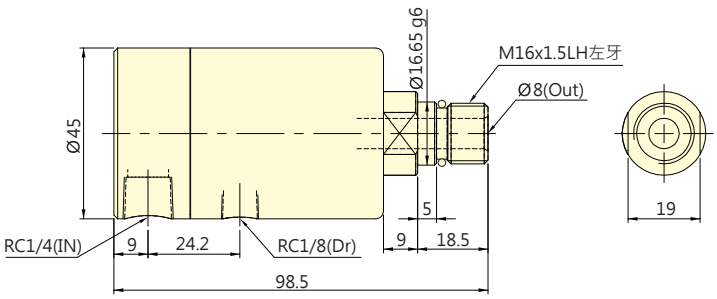

保留規格修改的權利 Subject to technical changes

技術規格 SPECIFICATIONS

型號	PV限制值 MPa· r/m	最高使用壓力 MPa(kgf/cm²)	吐出量 (使用壓力 50 kgf/cm²)	最高使用迴轉數(r.p.m.)	最小啟動壓力 MPa(kgf/cm²)	重量 (kg)
Model	PV Limit value MPa· r/m	Max. pressure MPa(kgf/cm²)	Delivery amount (at 50 kgf/cm²)	Max. speed (r.p.m.)	Min. pressure MPa(kgf/cm²)	Weight (kg)
RJ-92	17500	7.0(70)	28 l/min	10000	0.4(4)	0.46

SR-02 油壓中心架
SELF-CENTERING STEADY RESTS

標準型

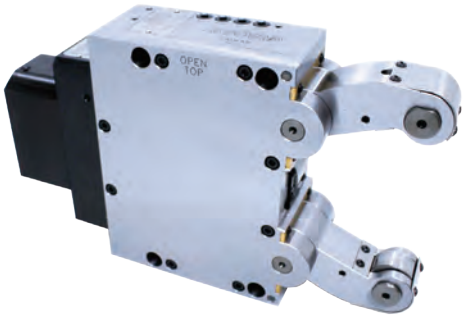

- 大夾持力與高同心度。
- 封閉式主體設計。
- 中央潤滑- 潤滑脂/ 油/ 油+ 空氣
- 內建逆止閥自鎖機構。
- 壓縮空氣防水防切屑設計，加工中切屑不易進入主體內。
- 切削擋屑裝置。

- High Clamping Force and High Concentricity.
- Enclosed Main Body Design.
- Central Lubrication: Grease/Oil/Oil + Air.
- Built-in Check Valve Locking Mechanism.
- Compressed Air Waterproof and Chip-Resistant Design: Prevents chips from entering the main body during machining.
- Chip Guarding Device.

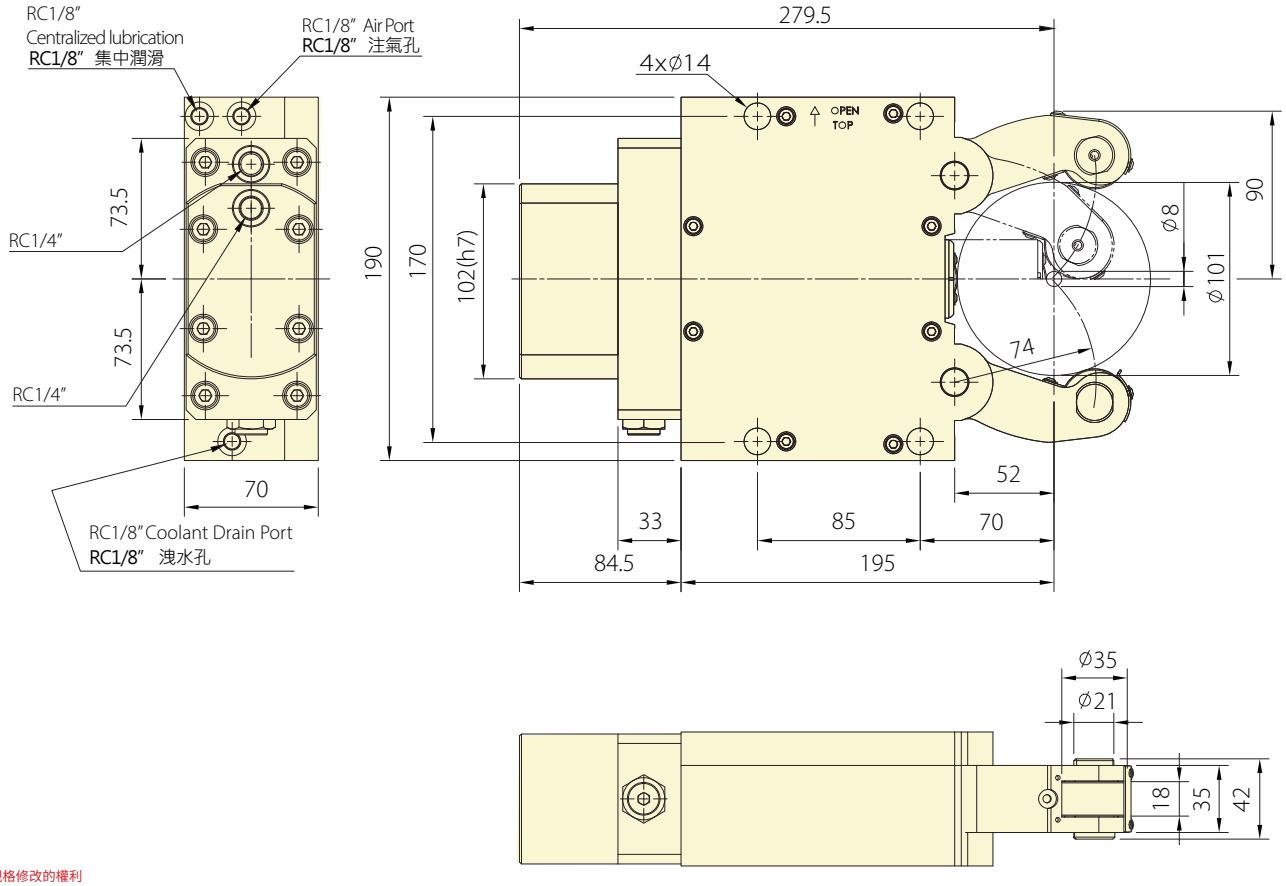

保留規格修改的權利
Subject to technical changes

技術規格 SPECIFICATIONS

型號	活塞面積	夾持直徑 Chucking Dia.		最大夾持力	滾輪最大線速度	最大使用壓力	定心精度	重複精度	夾持重量	重量
Model	Eff. piston area	最大 Max.	最小 Min.	Max. clamping force	Max. roller surface speed	Max. pressure	Clamping accuracy	Repeat accuracy	clamping weight	Weight
	cm^2	mm	mm	kN (kgf)	M/min.	bar	mm	mm	kg	kg
SR-02	19.6	101	8	4.5(459)	800	70	0.002	0.005	450	17.3

- 大夾持力與高同心度。
- 封閉式主體設計。
- 中央潤滑- 潤滑脂/ 油/ 油+ 空氣
- 內建逆止閥自鎖機構。
- 壓縮空氣防水防切屑設計，加工中切屑不易進入主體內。
- 切削擋屑裝置。

- High Clamping Force and High Concentricity.
- Enclosed Main Body Design.
- Central Lubrication: Grease/Oil/Oil + Air.
- Built-in Check Valve Locking Mechanism.
- Compressed Air Waterproof and Chip-Resistant Design: Prevents chips from entering the main body during machining.
- Chip Guarding Device.

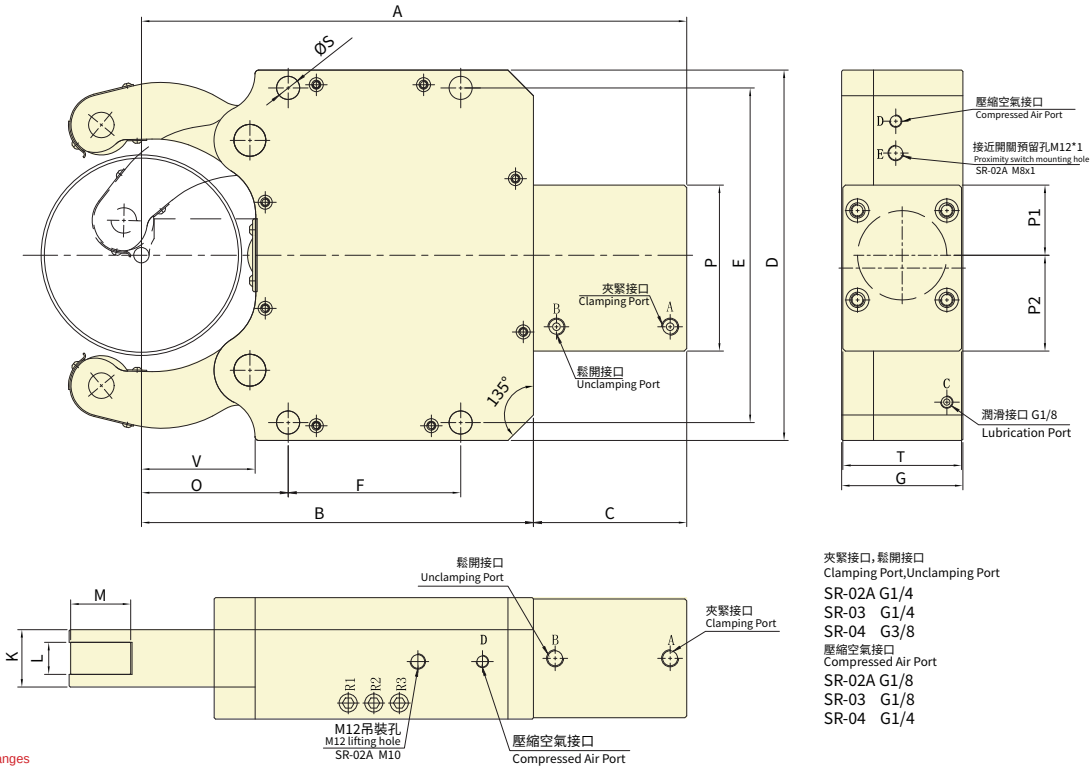

保留規格修改的權利
Subject to technical changes

技術規格 SPECIFICATIONS

型號	活塞面積	夾持直徑 Chucking Dia.		最大夾持力	滾輪最大線速度	最大使用壓力	定心精度	重複精度	夾持重量	重量
Model	Eff. piston area	最大 Max.	最小 Min.	Max. clamping force	Max. roller surface speed	Max. pressure	Clamping accuracy	Repeat accuracy	clamping weight	Weight
	cm^2	mm	mm	kN (kgf)	M/min.	bar	mm	mm	kg	kg
SR-02A	19.6	102	8	4.59(468)	900	30	0.02	0.005	459	19
SR-03	38.5	152	12	10.2(1040)	750	60	0.02	0.005	1000	39
SR-04	63.5	245	30	15(1529)	760	75	0.05	0.007	1500	98

外型尺寸 DIMENSIONS

Model	A	B	C	D	E	F	G	O
SR-02A	279	197	82	205	170	85	70	70
SR-03	427	307	120	290	262	135	95	115
SR-04	603	448	155	405	365	240	110	146

Model	K	L (Width of rollers) (滾輪厚度)	M (Diameter of rollers) (滾輪直徑)	P	P1	P2	S	T	V
SR-02A	35	19	35	102	51	51	14	68	54
SR-03	45	25	47	130	55	75	18	93	89
SR-04	60	25	52	150	75	75	23	105	128

SRR 油壓中心架
SELF-CENTERING STEADY RESTS

精密型

- 精密型。
- 本體全密封、低維護。
- 可編程、自動化產線使用。
- 帶噴水/氣防鐵屑(選配)、冷卻功能。
- 範圍：12-245mm。

- Precision Type.
- Sealed body design for low maintenance.
- Programmable, suitable for automated assembly lines.
- Equipped with water/air sprays for debris, coolant-proof, and chip-proof.
- Range: 12-245mm.

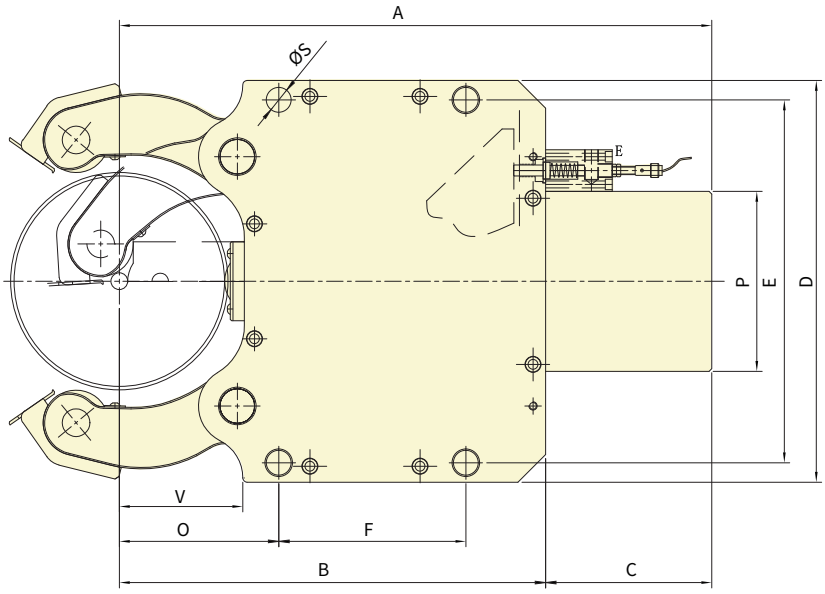

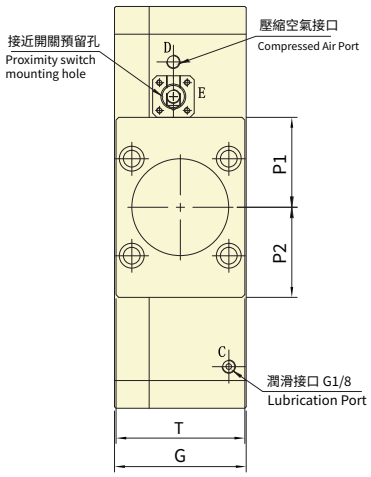

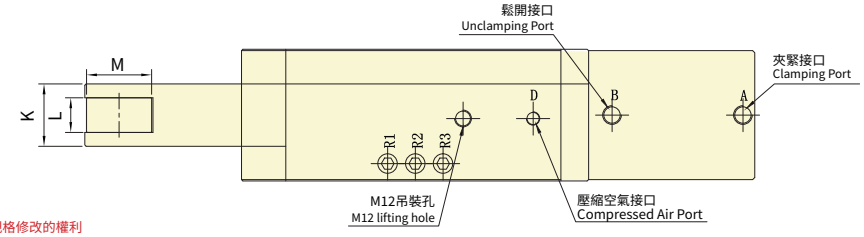

夾緊接口，鬆開接口
Clamping Port,Unclamping Port
SRR-03 G1/4
SRR-04 G3/8

壓縮空氣接口
Compressed Air Port
SRR-03 G1/8
SRR-04 G1/4

保留規格修改的權利
Subject to technical changes

技術規格 SPECIFICATIONS

型號	活塞面積	夾持直徑 Chucking Dia.		最大夾持力	滾輪最大線速度	最大使用壓力	定心精度	重複精度	夾持重量	重量
Model	Eff. piston area	最大 Max.	最小 Min.	Max. clamping force	Max. roller surface speed	Max. pressure	Clamping accuracy	Repeat accuracy	clamping weight	Weight
	cm^2	mm	mm	kN (kgf)	M/min.	bar	mm	mm	kg	kg
SRR-03	38.5	152	12	10.2(1040)	750	65	0.04	0.007	1000	39
SRR-04	63.5	245	30	15(1529)	760	60	0.05	0.007	1500	98

外型尺寸 DIMENSIONS

Model	A	B	C	D	E	F	G	O
SRR-03	427	307	120	290	262	135	95	115
SRR-04	603	448	155	405	365	240	110	146

Model	K	L (Width of rollers) (滾輪厚度)	M (Diameter of rollers) (滾輪直徑)	P	P1	P2	S	T	V
SRR-03	45	25	47	130	65	65	18	93	89
SRR-04	60	25	52	150	75	75	23	105	128

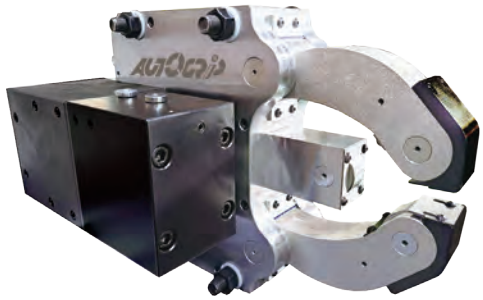

- 油缸側置中心架。
- 本體全密封、低維護。
- 帶噴水/氣防鐵屑(選配)、冷卻功能 。
- 尺寸小、結構緊湊。
- 範圍：12-245mm。

- Side-Mounted Hydraulic Cylinder Steady Rest.
- Fully Sealed Body, Low Maintenance.
- Optional Water/Air Jet for Chip Removal and Cooling Functionality.
- Compact Size and Structure.
- Range: 12-245 mm.

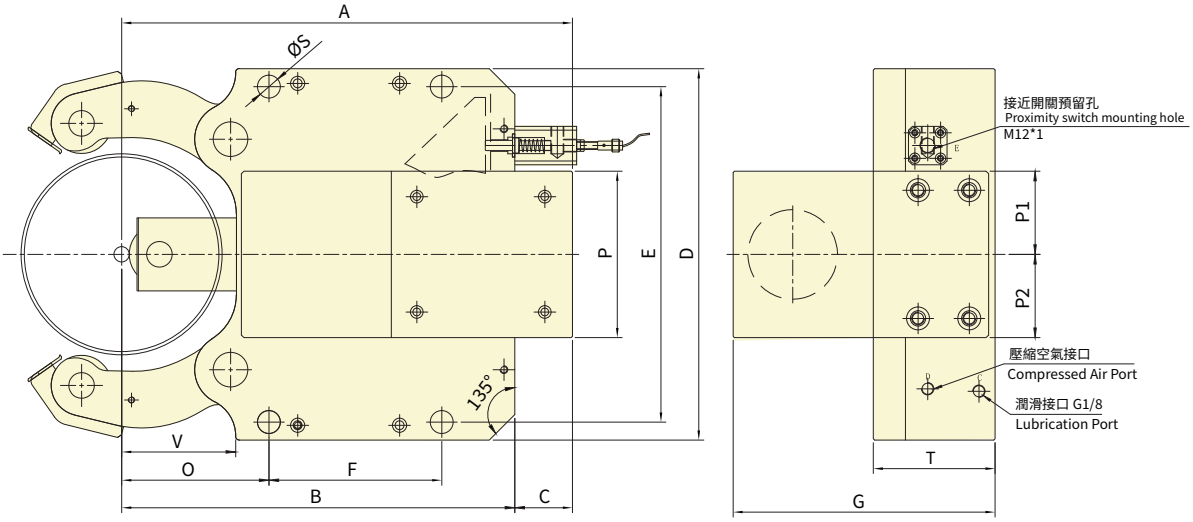

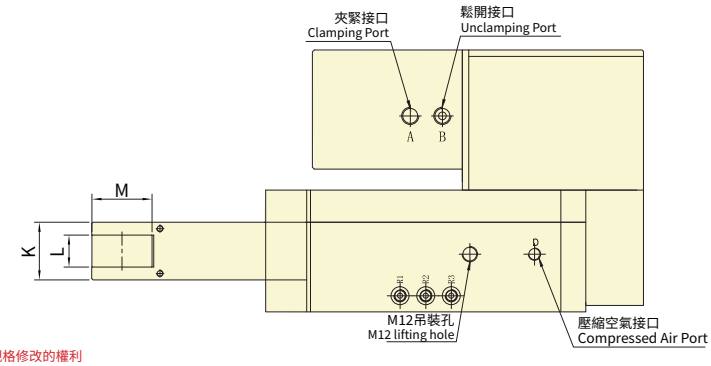

夾緊接口, 鬆開接口
Clamping Port,Unclamping Port
SRB-03 G1/4
SRB-04 G3/8

壓縮空氣接口
Compressed Air Port
SRB-03 G1/8
SRB-04 G1/4

保留規格修改的權利
Subject to technical changes

技術規格 SPECIFICATIONS

型號	活塞面積	夾持直徑 Chucking Dia.		最大夾持力	滾輪最大線速度	最大使用壓力	定心精度	重複精度	夾持重量	重量
Model	Eff. piston area	最大 Max.	最小 Min.	Max. clamping force	Max. roller surface speed	Max. pressure	Clamping accuracy	Repeat accuracy	clamping weight	Weight
	cm²	mm	mm	kN (kgf)	M/min.	bar	mm	mm	kg	kg
SRB-03	38.5	152	12	10(1019)	850	55	0.04	0.007	1000	44
SRB-04	63.5	245	30	15(1529)	750	75	0.05	0.007	1500	115

外型尺寸 DIMENSIONS

Model	A	B	C	D	E	F	G	O
SRB-03	352	307	45	290	262	135	204.5	115
SRB-04	480	448	32	405	365	240	245	146

Model	K	L (Width of rollers) (滾輪厚度)	M (Diameter of rollers) (滾輪直徑)	P	P1	P2	S	T	V
SRB-03	45	25	47	130	65	65	18	95	89
SRB-04	60	25	52	150	75	75	23	110	128

GFS-100 夾持力感測器
GRIPPING FORCE SENSOR

- 藍牙 5.0 傳輸穩定：擁有最新的藍牙 5.0 技術，確保無線連接的穩定性。
- Type-C 充電便利：支援 Type-C 充電，讓充電更加便捷。
- 高性能鋰電池：提供更長的續航時間，讓您在工作中無需擔心電量問題。
- 支援 Android 和 iOS：無論您使用的是 Android 還是 iOS 系統，GFS-100 都能夠完美兼容，讓您無縫體驗。
- 可配置 2 爪或 3 爪操作：根據您的實際需求，GFS-100 可以輕鬆配置為 2 爪或 3 爪操作，提供更大的彈性。
- 注意：第一代夾持力感測器 (GFS-100) 和第二代的夾持力感測器 (GFS-100) APP 不能共用。
- iOS 系統：Apple iOS 16.1.2 版本以上。Android 系統：Android 12 版本或以上。

- Stable Bluetooth 5.0 Transmission: Equipped with the latest Bluetooth 5.0 technology, ensuring stability in wireless connections.
- Convenient Type-C Charging: Supports Type-C charging for added convenience in recharging.
- High-Performance Lithium Battery: Provides a longer-lasting battery life, eliminating concerns about power during work.
- Supports Android and iOS: Whether you use Android or iOS systems, the GFS-100 is perfectly compatible, offering a seamless experience.
- Configurable for 2-Jaw or 3-Jaw Operation: Based on your specific needs, the GFS-100 can easily be configured for either 2-jaw or 3-jaw operation, providing greater flexibility.
- Note: The first-generation gripping force sensor (GFS-100) and the second-generation gripping force sensor (GFS-100) APP are not compatible and cannot be used interchangeably.
- iOS System: Apple iOS 16.1.2。Android System: Android version 12.

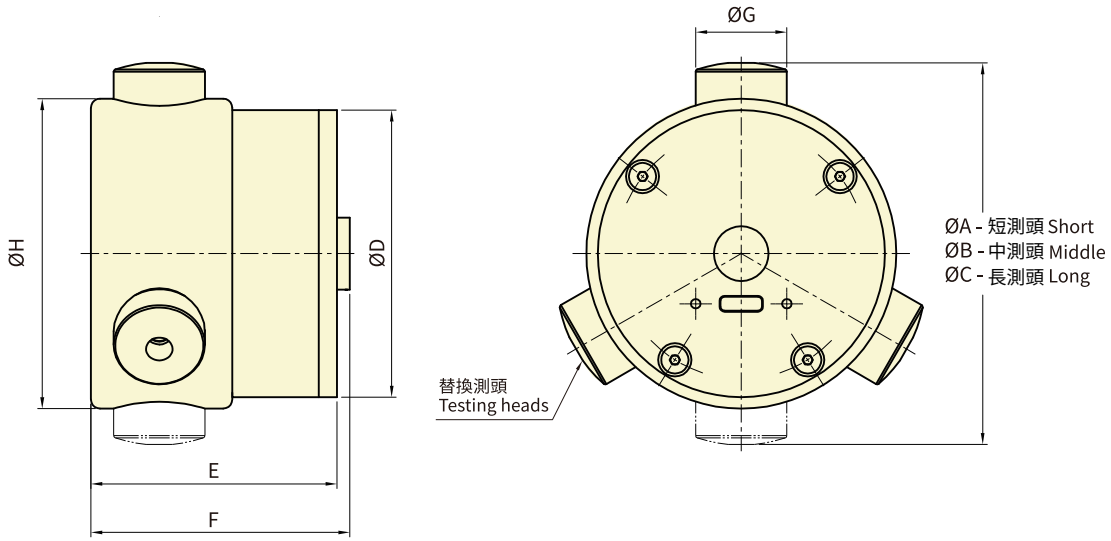

保留規格修改的權利 Subject to technical changes

技術規格 SPECIFICATIONS

型號	最大夾持力(單爪)	最高轉速	夾持範圍	準確度
Model	Max. Load (1-jaw)	Max. Speed	Gripping range	Accuracy
	(kN)	(r.p.m.)	(mm)	
GFS-100	100	6000	70 , 84 , 104	± 2%

外型尺寸 DIMENSIONS

Model	A	B	C	D	E	F	G	H
GFS-100	70	84	104	63	54	57	20	68

標準生爪(一)
STANDARD SOFT BLANK JAW

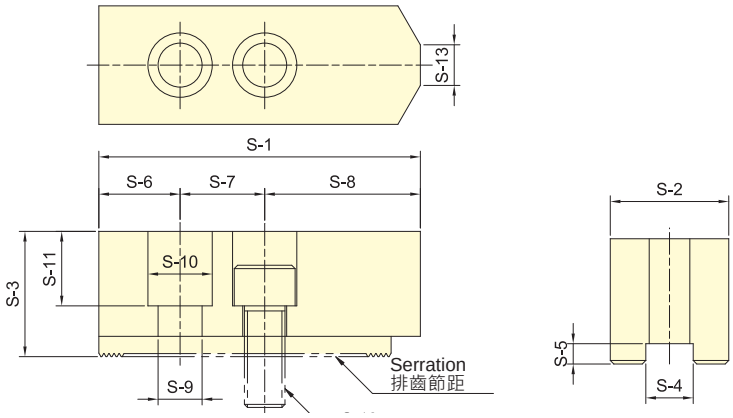

外型尺寸 DIMENSIONS

保留規格修改的權利 Subject to technical changes

型號 MODEL	S-1	S-2	S-3	S-4	S-5	S-6	S-7	S-8	S-9	S-10	S-11	S-12	S-13	排齒節距 Serration Pitch	適用夾頭 Matching Chuck	三爪重量 3 Jaw Weight kg
SJ-04	52	23	23	10	5	10	14	28	9	14	13	M8	3	1.5×60°	3H-204, 3P-04	0.5
SJ-05	62	25	30	10	5	10	14	38	9	14	20	M8	3.5	1.5×60°	3H-205, 3L-205, 3P-05, 3M-05	0.8
SJ-06	73	31	36	12	5	15	20	38	11	17	24	M10	14	1.5×60°	3H-206, 3L-206, 3P-06, 3M-06	1.5
SJ-08	95	35	37	14	5	24	25	46	13	19	22	M12	16	1.5×60°	3H-208, 3L-208, 3P-08, 3M-08	2.4
SJ-10	110	40	42	16	5	30	30	50	13	19	27	M12	18	1.5×60°	3H-210, 3L-210, 3P-10, 3M-10	3.7
*SJ-12H	130	50	50	21	5	40	30	60	17	25	30	M16	23	1.5×60°	3H-12, 3H-212, 3L-212, 3V-12, 3P-12, 3M-12	6.3
SJ-12P	130	50	50	18	5	40	30	60	16	23	30	M14	23	1.5×60°	3H-12, 3H-212, 3L-212, 3V-12, 3P-12, 3M-12	6.5
SJ-15H	165	62	62	22	8	37	43	85	21	32	37	M20	-	1.5×60°	3H-15, 3H-215, 3H-18, 3L-15, 3P-215, 3P-218, 3V-15, 3V-18	12.6
*SJ-15P	165	62	62	25.5	6	37	43	85	21	32	37	M20	-	1.5×60°	3H-15, 3H-215, 3H-18, 3L-15, 3P-215, 3P-218, 3V-15, 3V-18	12.5
SJ-21	180	64	70	25	9	40	60	80	21	32	45	M20	-	3.0×60°	3H-221, 3H-224, 3H-232, 3P-221, 3P-224, 3V-21, 3V-24, 3V-32	15.8

* SJ-12H 為 12" 夾頭出廠配備。(12"Chucks are originally equipped with SJ-12H.)
* SJ-15P 為 15" 夾頭出廠配備。(15"Chucks are originally equipped with SJ-15P.)

3U 夾頭之標準生爪 STANDARD SOFT JAW FOR 3U CHUCK

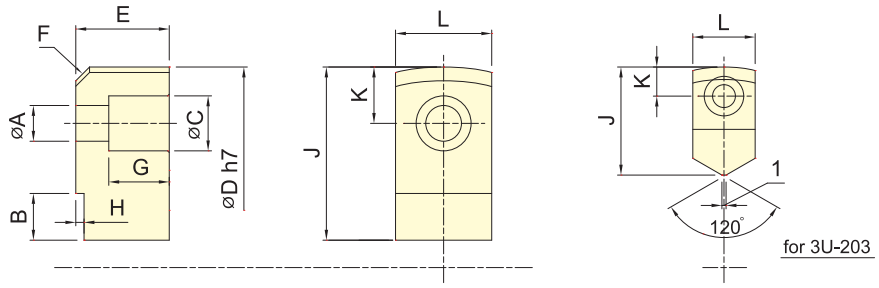

外型尺寸 DIMENSIONS

保留規格修改的權利 Subject to technical changes

型號 MODEL	A	B	C	D	E	F	G	H	J	K	L
3U-203	5.5	11	9.5	66	12	C3	7	3	26	7	15
3U-204	6.6	11	11	84	17	C4	11	3	32	9.5	20
3U-205	9	13.5	14	108	20	C4	12	3	41.5	13	24
3U-206	11	15	17	129	30	C6	20	3	50	17	30
3U-208	13	17	20	156	34	C6	22	3	63	20.5	35
3U-210	15	20	22	187	39	C6	24	4	74	23	40
3U-212	15	18	22	234	44	C6	29	4	72	23	40

2D/3D 夾頭之標準生爪 Standard Soft Jaw for 2D/3D chuck

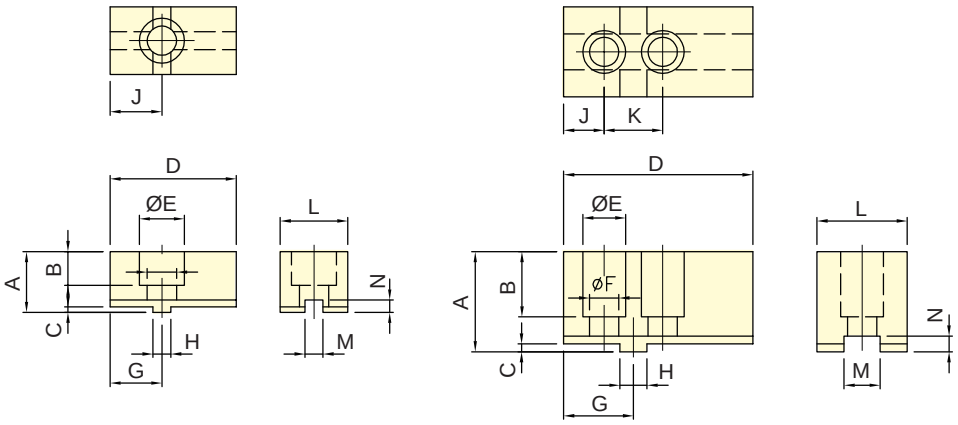

for 04"~06"　　for 08"~15"

保留規格修改的權利
Subject to technical changes

外型尺寸 DIMENSIONS

型號 MODEL	A	B	C	D	E	F	G	H	J	K	L	M	N
3D-04	22	13	2.5	52	17.5	11	19	8	19	-	25	8	5.5
3D-05	27	15	2.5	56	20	13	23	8	23	-	30	8	5.5
3D-06	34	21	3	70	23	15.5	27	10	27	-	35	10	6
3D-08	44.5	29	3.5	84	19	13	31	12	18	26	40	16	7
3D-10	49.5	32	3.5	100	22	15	38	15	22	32	50	18	7
3D-12	54.5	36	3.5	120	26	18	42	17	24	36	60	20	7
3D-15	65	40	5	165	26	18	60	20	40	40	70	24	10

3E 夾頭之標準生爪 Standard Soft Jaw for 3E chuck

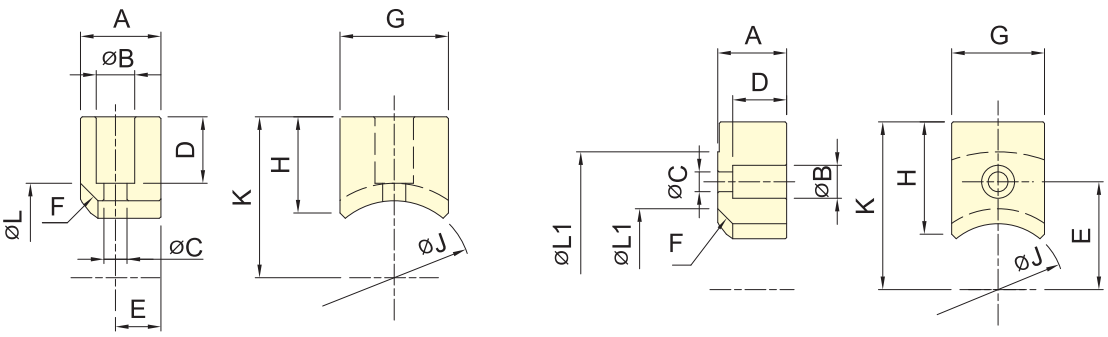

標準生爪A型
TYPE A

標準生爪B型
TYPE B

保留規格修改的權利
Subject to technical changes

外型尺寸 DIMENSIONS

型號 MODEL		A	B	C	D	E	F	G	H	J	K	L	L1
3E-05	**A 型**	20	11	6.6	16.5	10	C5	25	22	29	34.5	39	-
	B 型	20	11	6.6	15	25.5	C5	25	30	29	42.5	39	69
3E-06	**A 型**	23	11	7	19	13	C5	31	27.5	44	46	54	-
	B 型	23	11	6.6	18	36	C5	31	37.5	44	56	54	92
3E-08	**A 型**	30	14	9	25	15	C6	35	36	50	56	62	-
	B 型	30	14	9	24	41	C6	35	56	50	76	62	112
3E-10	**A 型**	35	17.5	11	26.5	17.5	C5	40	40	60	64.5	70	-
	B 型	35	17.5	11	26	47.5	C5	40	71.5	60	96	70	129

3R 夾頭之標準生爪 Standard Soft Jaw for 3R chuck

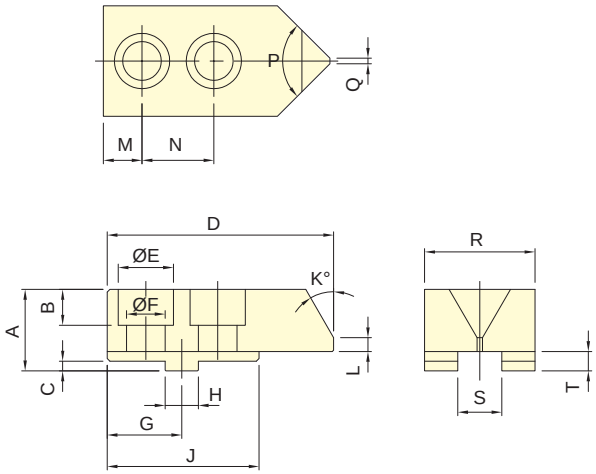

保留規格修改的權利
Subject to technical changes

外型尺寸 DIMENSIONS

型號 MODEL	A	B	C	D	E	F	G	H	J	K	L	M	N	P	Q	R	S	T
3R-08	29.5	13	3.5	82	20	14	27	12	55	30	5	14	26	90	2	40	16	7
3R-10	30.5	15	3.5	102	23	16	37	15	65	30	7	21	32	90	2	40	18	7

3W 夾頭之標準生爪 Standard Soft Jaw for 3W chuck

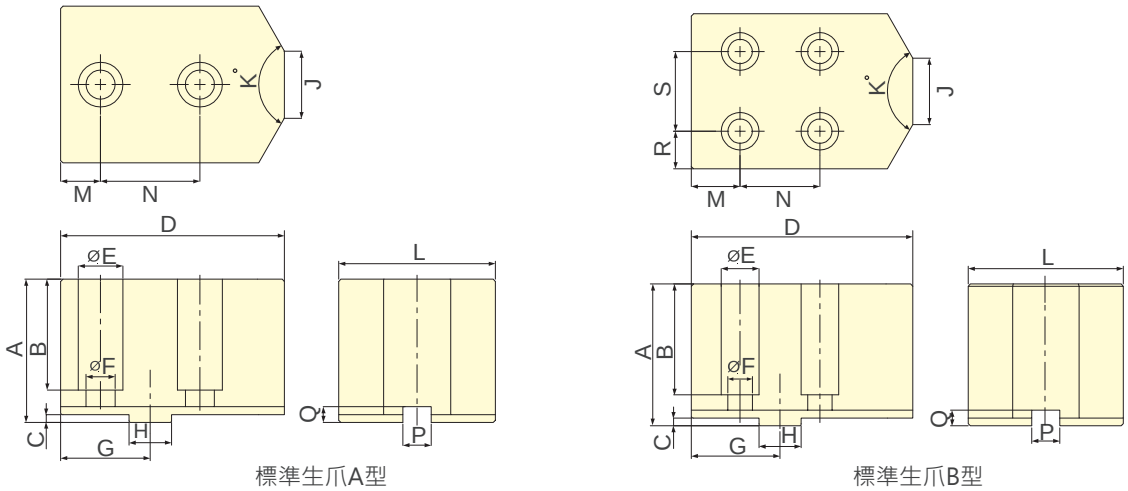

標準生爪A型
TYPE A

標準生爪B型
TYPE B

保留規格修改的權利 Subject to technical changes

外型尺寸 DIMENSIONS

型號 MODEL		A	B	C	D	E	F	G	H	J	K	L	M	N	P	Q	R	S
3W-08	**A 型**	60	44	3.5	80	20	13	35	12.68	30	120	57	16	38	7.94	7	-	-
	B 型	60	48	3.5	80	17	11	35	12.68	30	120	57	19	32	7.94	7	12.5	32
3W-10	**A 型**	64	49.5	3.5	100	20	13	40	19.03	30	120	70	17.8	44.4	12.7	7	-	-
	B 型	64	50	3.5	100	17	11	40	19.03	30	120	70	22	36	12.7	7	17	36
3W-12	**A 型**	64	49.5	3.5	100	20	13	40	19.03	30	120	70	17.8	44.4	12.7	7	-	-
	B 型	64	50	3.5	100	17	11	40	19.03	30	120	70	22	36	12.7	7	17	36

*3W 系列軟爪可搭配鎢鋼爪，根據工件條件選擇鎢鋼爪型式，訂製生產。
*3W series Carbide gripper is optional. * The type of the gripper is selected according to the work-piece conditions.

3MF 夾頭之標準生爪 Standard Soft Jaw for 3MF chuck

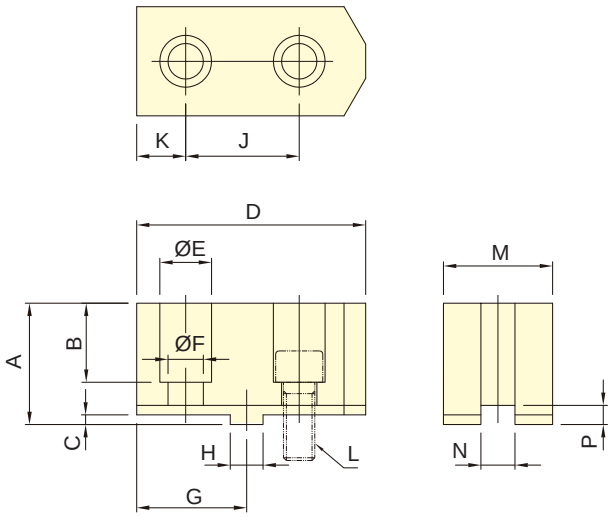

保留規格修改的權利
Subject to technical changes

外型尺寸 DIMENSIONS

型號 MODEL	A	B	C	D	E	F	G	H	J	K	L	M	N	P	三爪重量 (kg) 3 Jaw Weight
3MF-20	70	48	6	160	25	17	80	19.03	76.2	41.9	M16	50	12.7	11.5	10.4

AP 夾頭之標準生爪 Standard Soft Jaw for AP chuck

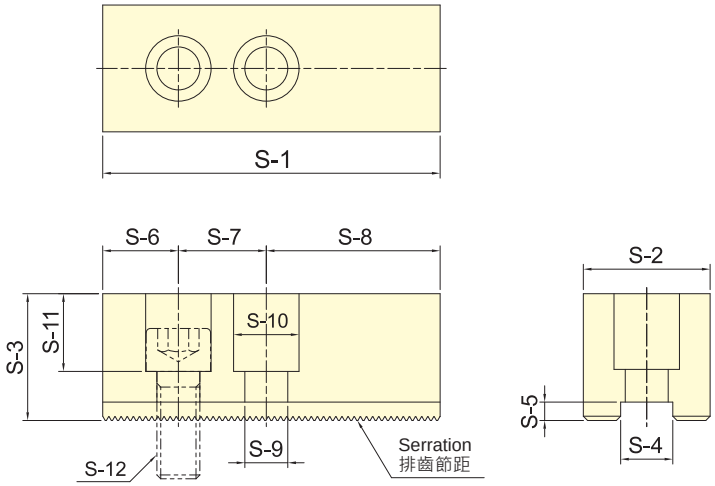

保留規格修改的權利
Subject to technical changes

外型尺寸 DIMENSIONS

型號 MODEL	S-1	S-2	S-3	S-4	S-5	S-6	S-7	S-8	S-9	S-10	S-11	S-12	排齒節距 Serration Pitch	適用夾頭 Matching Chuck	三爪重量 (kg) 3 Jaw Weight
SJ-185	165	62	62	25.5	9	37	43	85	21	32	38	M20	3.0×60°	AP-145, AP-185	12.2
SJ-275	180	64	70	25.5	9	40	60	80	21	32	45	M20	3.0×60°	AP-230, AP-275	16.1
SJ-320	210	75	80	30	9	40	60	110	26	38	55	M24	3.0×60°	AP-320, AP-375	24.7

標準硬爪(一)
STANDARD HARDENED JAW

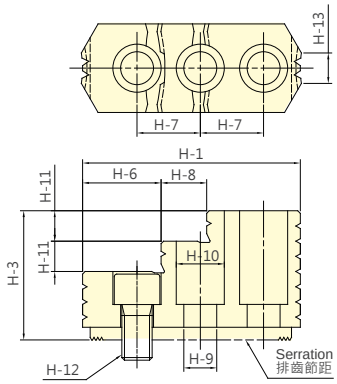

Fig. 1

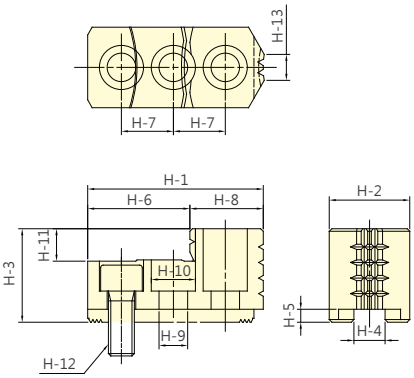

Fig. 2

保留規格修改的權利
Subject to technical changes

外型尺寸 DIMENSIONS

型號 MODEL	H-1	H-2	H-3	H-4	H-5	H-6	H-7	H-8	H-9	H-10	H-11	H-12	H-13	排齒節距 Serration Pitch	適用夾頭 Matching Chuck	三爪重量 3 Jaw Weight kg	參考圖 Reference Drawing
HJ-05	54.2	23	28	10	4	31.1	14	23.1	8.5	13.5	10	M8	3.6	1.5×60°	3H-204, 3H-205	1	Fig.2
HJ-06	67.6	31	36	12	5	40.2	20	27.4	11	17	12	M10	9.3	1.5×60°	3H-206, 3P-06	1.7	Fig.2
HJ-08	86.1	35	51	14	5	33.5	25	18.4	13	19	12	M12	14	1.5×60°	3H-208, 3P-08	2	Fig.1
HJ-10	100	40	54	16	5	39.5	30	22.5	13	19	13	M12	15	1.5×60°	3H-210, 3P-10	3	Fig.1
***HJ-12H**	100.2	50	52	21	5	64.7	30	35.5	17	25	17	M16	31.5	1.5×60°	3H-12,3H-212, 3L-212, 3V-12,3P-12, 3M-12	3.5	Fig.2
***HJ-12P**	100.2	50	52	18	5	64.7	30	35.5	15	23	17	M14	31.5	1.5×60°	3H-12,3H-212, 3L-212, 3V-12,3P-12, 3M-12	3.6	Fig.2
***HJ-15H**	140.7	62	86	22	8	62.5	43	34	21	32	20	M20	43	1.5×60°	3H-15, 3H-215, 3H-18, 3L-15 3V-15, 3V-18,3P-215, 3P-218	9.6	Fig.1
***HJ-15P**	140.7	62	86	25.5	6	62.5	43	34	21	32	20	M20	43	1.5×60°	3H-15, 3H-215, 3H-18, 3L-15 3V-15, 3V-18,3P-215, 3P-218	9.5	Fig.1
HJ-21	153.5	80	90	25	9	103.7	50	49.8	21	32	40	M20	56.5	3.0×60°	3H-221, 3H-224, 3H-232, 3P-221, 3P-224, 3V-21, 3V-24, 3V-32	14.3	Fig.2

* HJ-12H、HJ-12P、HJ-15H、HJ-15P 選用前請確認 H-4 的尺寸。
* For HJ-12H, HJ-12P, HJ-15H, HJ-15P, please confirm the dimension of H-4 before placing the order.

3MF 標準硬爪
STANDARD HARDEN JAW FOR 3MF CHUCK

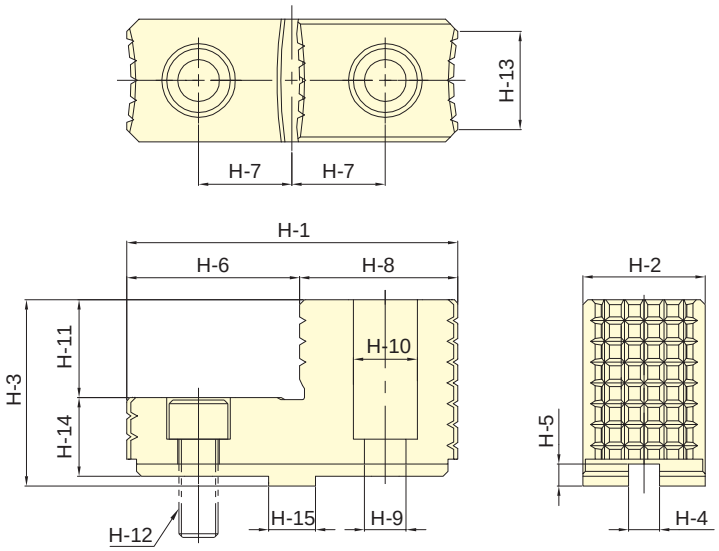

保留規格修改的權利 Subject to technical changes

外型尺寸 DIMENSIONS

型號 Model	H-1	H-2	H-3	H-4	H-5	H-6	H-7	H-8	H-9	H-10	H-11	H-12	H-13	H-14	H-15	適用夾頭 Matching Chuck	三爪重量 kg 3 Jaw Weight
3MF-20	135	50	76	12.7	9	70	38.1	65	17	26	40	M16	40	32	19.03	3MF-20	6.7

AP 標準硬爪 STANDARD HARDEN JAW FOR AP CHUCK

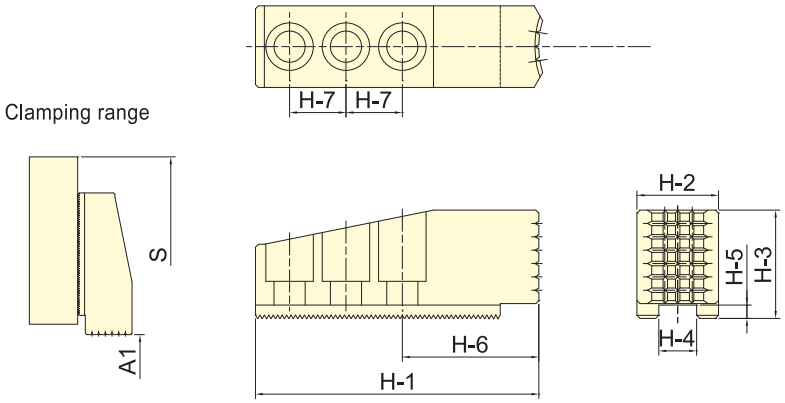

保留規格修改的權利 Subject to technical changes

外型尺寸 DIMENSIONS

型號 Model	H-1	H-2	H-3	H-4	H-5	H-6	H-7	A1	S	排齒節距 Serration Pitch	適用夾頭 Matching Chuck	三爪重量 kg 3 Jaw Weight kg
HJ-145	191	55	73	25.5	9	92	38	30-125	420	3.0×60°	AP-145	12.5
HJ-145	191	55	73	25.5	9	92	38	35-165	460	3.0×60°	AP-185	12.5
HJ-145	191	55	73	25.5	9	92	38	55-240	535	3.0×60°	AP-230	12.5
HJ-145	191	55	73	25.5	9	92	38	100-285	580	3.0×60°	AP-275	12.5
HJ-320	243	75	82	30	9	110	50	105-300	658	3.0×60°	AP-320	24.6
HJ-320	243	75	82	30	9	110	50	165-375	738	3.0×60°	AP-375	24.6

T-NUT

T 形螺帽
T-NUT

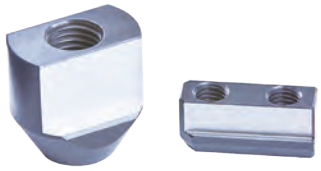

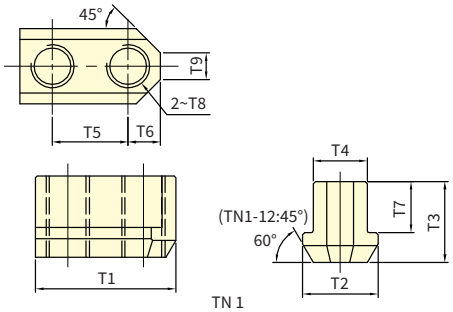

TN 1

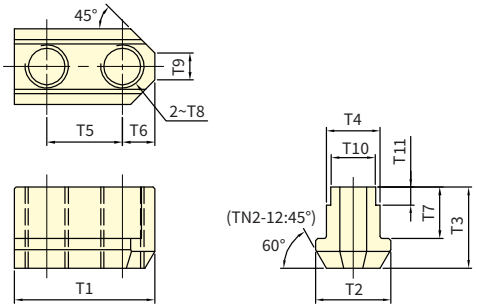

TN 2

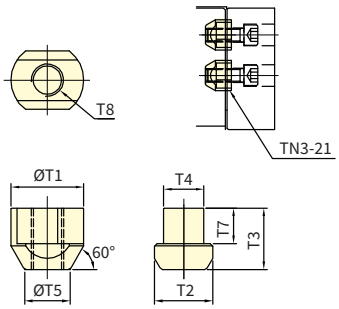

TN 3

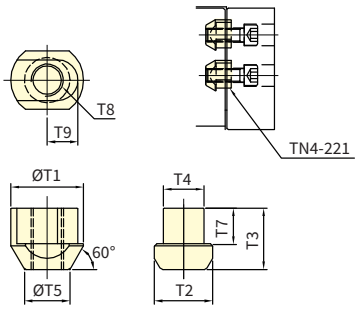

TN 4

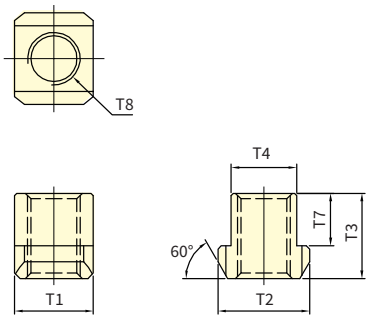

TN 5

保留規格修改的權利
Subject to technical changes

外型尺寸 DIMENSIONS

型號 Model	T1	T2	T3	T4	T5	T6	T7	T8	T9	T10	T11	適合夾頭 Matching Chuck	三只重量 3 Pcs Weight kg
TN1-04	26	14	15	10	14	6	9.5	M8	5	-	-	H-204, H-205, P-04, P-05, L-205, M-05, SP-304	0.06
TN1-06	36	17	18.5	12	20	8	11	M10	6	-	-	H-206, P-06, L-206, 1L-06, M-06, 3N-06, AP-52, RAP-306, SP-306	0.15
TN1-08	46.5	20	20.5	14	25	10.5	12	M12	10	-	-	H-208, P-08, L-208, 1L-08, M-08, 3N-08, 4T-08, AP-66, RAP-308, SP-308	0.27
TN1-10	51	22	21.5	16	30	11	13	M12	11	-	-	H-210, P-10, L-210,1L-10, M-10 , 3N-10, 4T-10, AP-86, RAP-310, SP-310	0.36
*** TN1-12**	55.5	29.5	28	21	30	12	16.7	M16	13	-	-	P-12, L-12, M-12	0.63
TN2-12	55.5	29.5	28	21	30	12	16.7	M14	13	18	4.5	P-12, L-12, M-12	0.63
*** TN1-15**	80	35	39.5	25.5	43	17	20.5	M20	14	-	-	2H-15, 3H-18B, P-15, P-215, P-218, L-15, M-215, M-218, V-15, V-18	1.53
TN2-15	80	35	39.5	25.5	43	17	20.5	M20	14	22	6	2H-15, 3H-18B, P-15, P-215, P-218, L-15, M-215, M-218, V-15, V-18	1.5
*** TN1-212**	56	29.5	23.5	21	30	12	12	M16	10	-	-	H-12, H-212, L-212, V-12, 4T-15 , AP-115	0.63
TN2-212	56	29.5	23.5	21	30	12	12	M14	10	18	4	H-12, H-212, L-212, V-12, 4T-15, AP-115	0.63
*** TN1-215**	80	35	34	25.5	43	17	19	M20	14	-	-	3H-15, 4H-15, 3H-18, 4H-18, H-215, L-215, SP-316	1.32
TN2-215	80	35	34	25.5	43	17	19	M20	14	22	6	3H-15, 4H-15, 3H-18, 4H-18, H-215, L-215, SP-316	1.29
TN3-21	46	37.5	45	25	26	-	26	M20	-	-	-	P-221, P-224, M-221, M-224, V-21, V-24, V-32,	1.84
TN4-221	45	36	38	25	28	-	22	M20	19	-	-	H-221, H-224, H-232, SP-320, SP-324	0.63
TN5-185	32	35	30	25.5	-	-	19	M20	-	-	-	AP-145, AP-185, AP-230, AP-275	0.15
TN5-320	36	42	39	30	-	-	24	M24	-	-	-	AP-320, AP-375	0.24

* TN1-12 & TN1-212 為 12" 夾頭出廠配備。(12" Chucks are originally equipped with TN1-12 & TN1-212.)
* TN1-15 & TN1-215 為 15" 夾頭出廠配備。(15" Chucks are originally equipped with TN1-15 & TN1-215.)

夾頭法蘭
CHUCK ADAPTORS

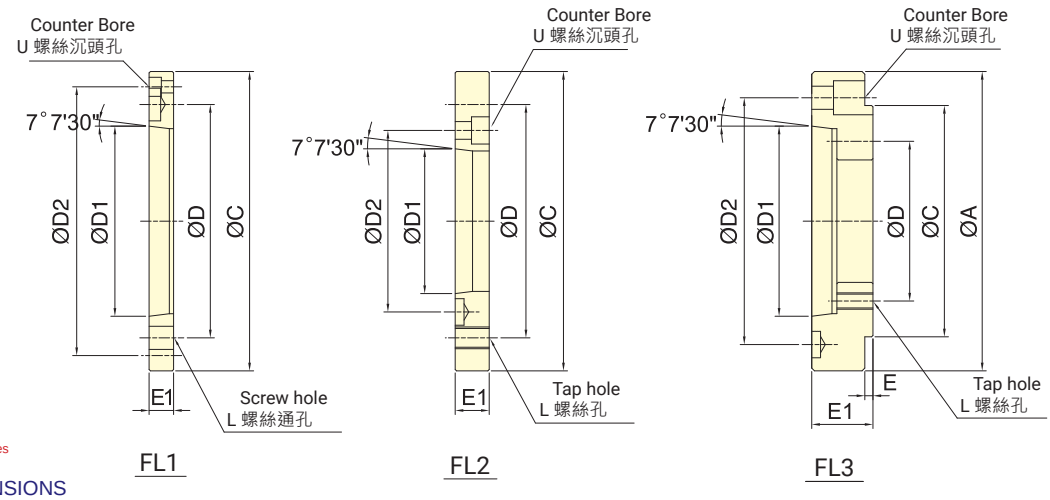

保留規格修改的權利
Subject to technical changes

外型尺寸 DIMENSIONS

Model	A	C	D	D1	D2	E	E1	L	U	備註 Remark	重量 Weight (kg)
FL3-04A24	110	85	70.6	63.513	82.6	8	28	M10	M10	3H-204, 2H-204	1.12
FL3-04A25	140	85	70.6	82.563	104.8	5.5	32	M10	M10	3H-204, 2H-204	2.28
FL1-05A24	-	110	82.6	63.513	96	-	15	M10	M6	3H-205, 2H-205, 3L-05, 2L-05, 3J-05, 2J-05	0.65
FL3-05A25	135	110	82.6	82.563	104.8	6	30	M10	M10	3H-205, 2H-205, 3L-05, 2L-05	1.99
FL1-06A25	-	140	104.8	82.563	116	-	15	M10	M6	2H-206, 4H-206, 3H-206, 3P-06, 2P-06, 3M-06, 2M-06, 3E-06, 3D-06, 2D-06, 3N-06, 3J-06, 2J-06	0.96
							*18			*3L-206, *2L-206	
FL3-06A26	165	140	104.8	106.375	133.4	6	35	M10	M12	2H-206, 4H-206, 3H-206, 3L-206, 2L-206, 3P-06, 2P-06, 3M-06, 2M-06, 3E-06, 3D-06, 2D-06, 3N-06, 3J-06, 2J-06	3.12
FL2-08A25	-	170	133.4	82.563	104.8	-	23	M12	M10	3H-208, 2H-208, 4H-208, 3P-08, 2P-08, 3M-08, 2M-08, 4T-08, 3E-08, 3D-08, 2D-08, 3N-08, 3J-08, 2J-08, 3R-08, 3W-08, 3Q-08	2.7
										*3L-208, *2L-208,	
FL1-08A26	-	170	133.4	106.375	150	-	17	M12	M6	2H-208, 4H-208, 3H-208, 3P-08, 2P-08, 3M-08, 2M-08, 4T-08, 3E-08, 3D-08, 2D-08, 3N-08, 3J-08, 2J-08, 3R-08, 3W-08, 3Q-08	1.55
							*23			*3L-208, *2L-208	
FL2-10A26	-	220	171.4	106.375	133.4	-	25	M16	M12	4H-10, 3P-10, 2P-10, 3M-10, 2M-10, 3H-12, 2H-12, 4H-12, 3L-212, 2L-12, 3P-12, 2P-12, 3M-12, 2M-12, 4T-10, 4T-12, 3E-10, 3D-10, 2D-10, 3N-10, 3J-10, 2J-10, 3R-10, 3Q-10, 3W-10, 3W-12	5.02
FL1-10A28	-	220	171.4	139.719	190	-	18	M16	M8	2H-210, 4H-10, 3H-210, 3L-210, 2L-210, 3P-10, 2P-10, 3M-10, 2M-10, 3H-12, 2H-12, 4H-12, 3L-212, 2L-12, 3P-12, 2P-12, 3M-12, 2M-12, 4T-10, 4T-12, 3E-10, 3D-10, 2D-10, 3N-10, 3J-10, 2J-10, 3R-10, 3Q-10, 3Q-12, 3W-10, 3W-12	2.73
FL2-15A28	-	300	235	139.719	171.4	-	33	M20	M16	3H-15, 3H-212, 2H-15, 4H-15, 3L-15, 2L-15, 3P-215, 2P-15, 3M-15, 2M-15, 4T-15, 3H-18, 4H-18, 3P-218	12.52
FL1-15A211	-	300	235	196.869	260	-	22	M20	M10	3H-15, 3H-212, 2H-15, 4H-15, 3L-15, 2L-15, 3P-215, 2P-15, 3M-15, 2M-15, 4T-15, 3H-18, 4H-18, 3P-218	6.03
FL2-21A28	-	380	330.2	139.719	171.4	-	33	M24	M16	3H-215, 3P-221, 3P-224	22.05
FL2-21A211	-	380	330.2	196.869	235	-	40	M24	M20	3H-215	16.28
							*27			*3P-221, *3P-224	
FL1-21A215	-	380	330.2	285.775	330.2	-	27	M24	M12	3H-215, 3H-18B, 3H-221, 3P-221, 3P-224	8.6
FL2-40A215	-	520	463.6	285.775	330.2	-	40	M24	M24	3H-224	43.26
FL1-40A220	-	520	463.6	412.775	463.6	-	27	M24	M12	3H-224, 3H-232	13.55

“*” 記號表示接單生產之型號規格，無現貨供應。 (Models with "*" mark are produced only by order.

CT/CT-S 集水盒與行程確認裝置
COOLANT COLLECTOR WITH STROKE CONTROL

- 可附加行程確認裝置和線性檢知裝置(選配)。
- The proximity switch and linear Sensor are optional.

■ 行程確認裝置。(選配) The proximity switch is optional.

電壓	負荷容量	輸出規格
Power supply	Switching cap.	Output tpye
DC 10/30V	100mA	NPN

■ 端子連接 Terminal Connections

+V	OP1	OV
棕 BROWN	黑 BLACK	藍 BLUE

■ 線性檢知裝置安裝示意圖
linear Sensor installation drawing

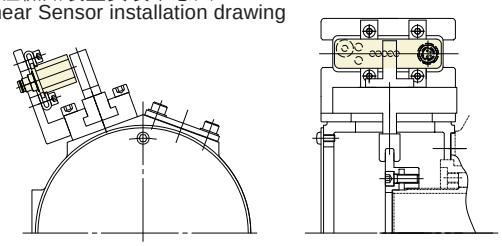

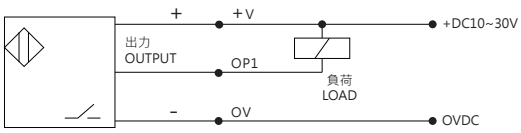

CT

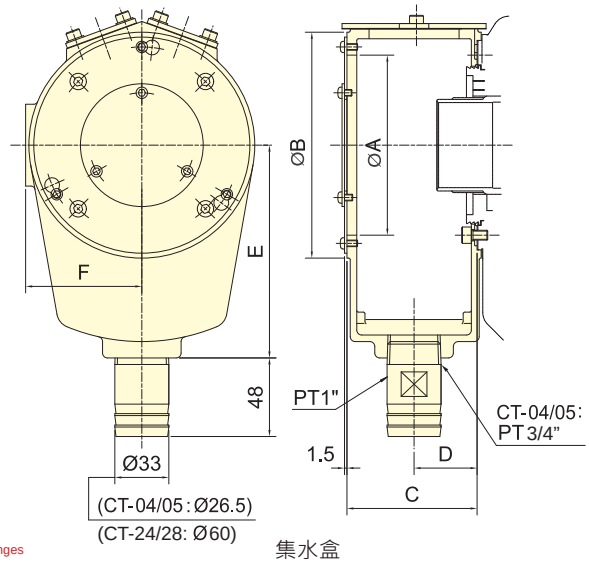

集水盒
Coolant Collector

CT-S

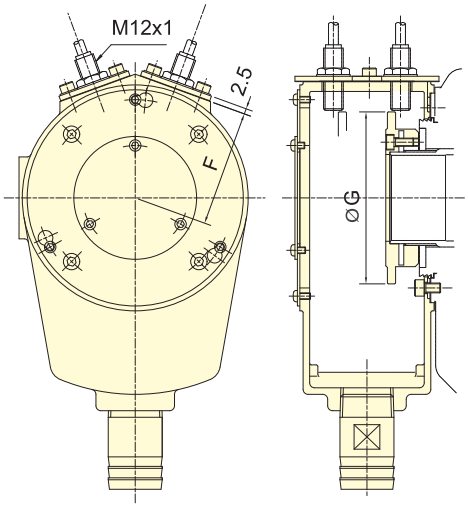

集水盒與檢出環
Coolant Collector with Detecting Ring

保留規格修改的權利
Subject to technical changes

外型尺寸 DIMENSIONS

Model	A	B	C	D	E	F	G	重量Weight (kg)		適用迴轉缸
								CT	CT-S	Matching cyl.
CT-04/CT-04S	87	110	60	29	110	57	79	0.9	1.1	TH-428
CT-05/CT-05S(TH)	87	110	60	29	110	57	84	0.9	1.1	TH-A536
CT-05/CT-05S(TK)	87	110	60	29	110	57	84	0.9	1.1	TK-A528, TK-A533
CT-06/CT-06S	100	125	74	36	120	64.5	94	1.2	1.6	TK-C643, TK-A646, TK-B646, TK-C646, TR-646
CT-08/CT-08S	110	138	80	39	130	71	105	1.3	1.8	TK-B846, TK-A853, TK-B853, TR-853
CT-K10/CT-K10S	158	185	88	43	160	94.5	145	1.9	2.6	TK-A1068, TK-A1075, TK-A1078, TR-1075
CT-12/CT-12S	158	185	88	43	160	94.5	145	1.9	2.6	TK-A1287, TK-A1291, TR-1291
CT-15/CT-15S	206	235	100	50	210	121	190	3.1	4.3	TK-A1511, TK-A1512,TK-A1512-35
CT-21/CT-21S	226	255	100	50	210	131	210	3.3	4.6	TK-2114
CT-24/CT-24S	250	270	100	50	230	154	248	3.5	5.5	TK-2416, TK-2416L
CT-28/CT-28S	310	330	100	50	260	181	305	4.3	7.2	TK-2820

CT-SB/CT-SBS 集水盒與行程確認裝置
COOLANT COLLECTOR WITH STROKE CONTROL

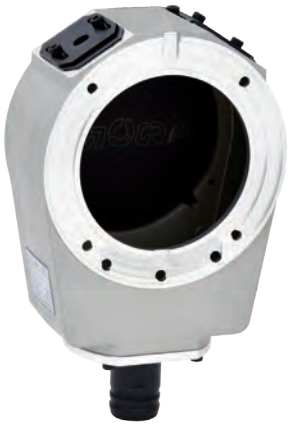

- 可附加行程確認裝置和線性檢知裝置(選配)。
- 加大的排水管接頭Ø40和Ø60(選購品)。
- Ø60排水管接頭只適用於CT-S08B、CT-S10B、CT-S12B。
- The proximity switch and linear Sensor are optional.
- Drain port Ø40 and Ø60 are optional product.
- Drain port Ø60 only use to CT-S08B,CT-S10B,CT-S12B.

■ 行程確認裝置。(選配) The proximity switch is optional.

電壓	負荷容量	輸出規格
Power supply	Switching cap.	Output tpye
DC 10/30V	100mA	NPN

■ 端子連接 Terminal Connections

+V	OP1	OV
棕 BROWN	黑 BLACK	藍 BLUE

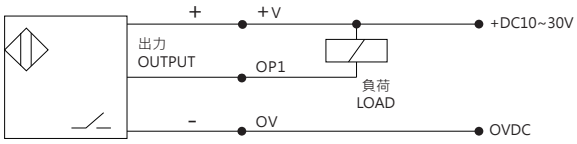

■ 線性檢知裝置安裝示意圖
linear Sensor installation drawing

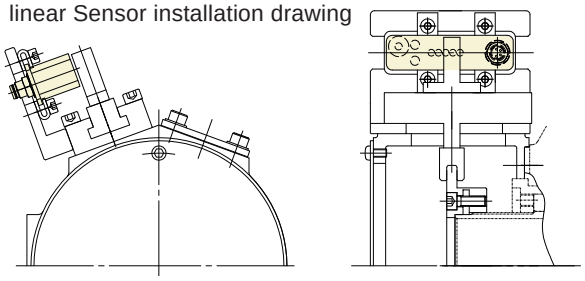

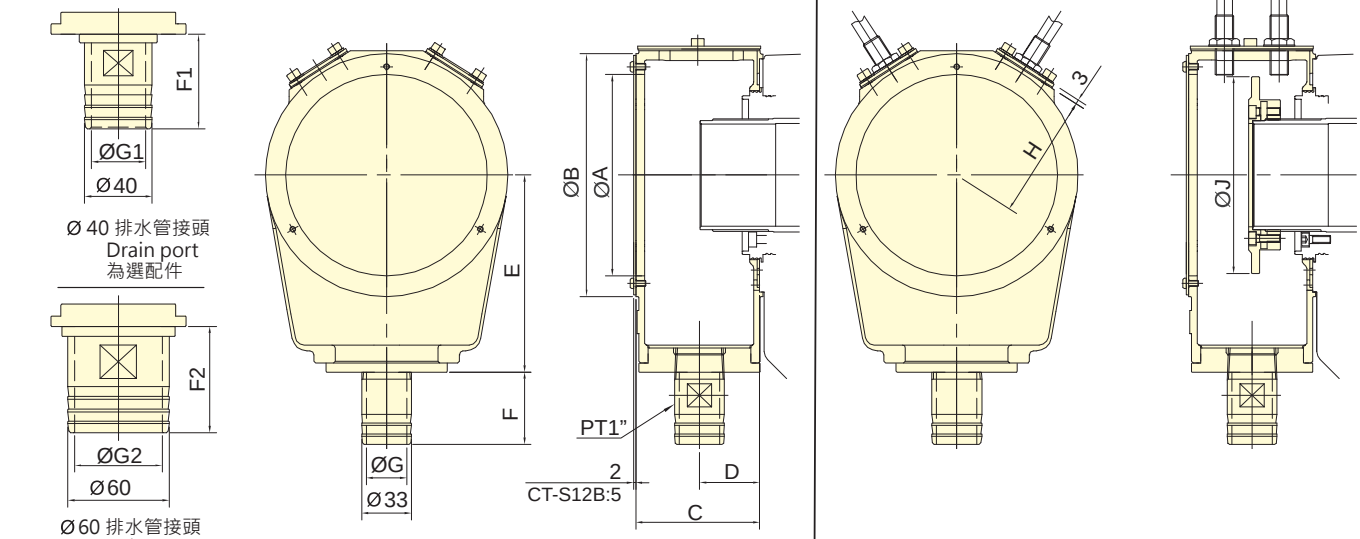

集水盒
Coolant Collector

集水盒與檢出環
Coolant Collector with Detecting Ring

保留規格修改的權利
Subject to technical changes

外型尺寸 DIMENSIONS

Model	A	B	C	D	E	F	F1	F2	G	G1	G2	H	J	重量Weight (kg)		適用迴轉缸
														CT-SB	CT-SBS	Matching cyl.
CT-S05B/CT-S05BS	97	120	68.3	33.3	96	49.6	56	-	25	32	-	62	86	1.1	1.6	TS-539, TR-539
CT-S08B/CT-S08BS	133	160	82	40	130	49.6	56	63	25	32	52	82	130	0.9	1.4	TS-866
CT-S10B/CT-S10BS	160	188	88	43	148	49.6	56	63	25	32	52	96	148	1.16	2.9	TS-1081
CT-S12B/CT-S12BS	205	234	87	43.5	171	49.6	56	63	25	32	52	121	190	4.3	5.6	TS-1210

立式氣缸用自鎖閥
STATIONARY CYLINDER LOCK VALVE FOR AIR STATIONARY CHUCK

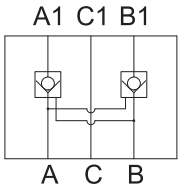

Circuit drawing
迴路圖

Model:FV-01

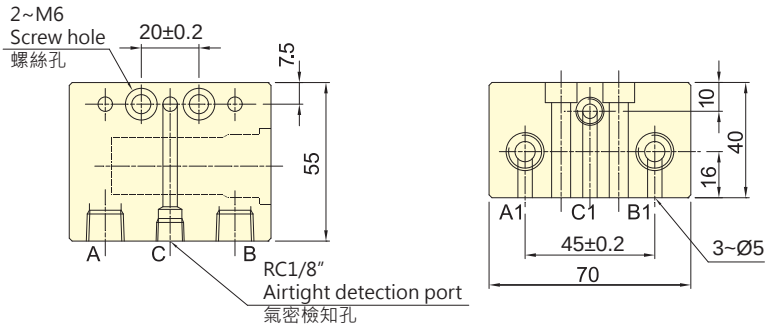

Model:FV-03

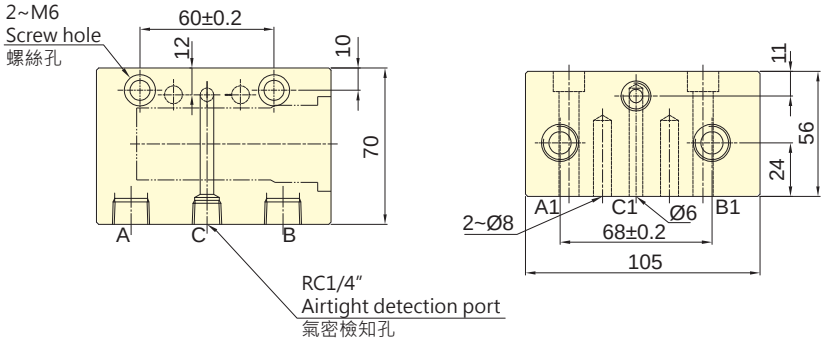

中空拉桿長度計算
THE CALCULATION OF DRAW TUBE LENGTH

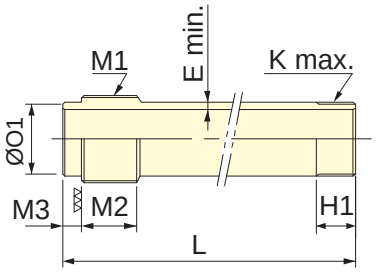

中空拉桿詳圖 Detail of Draw Tube

L=A+G2max.+H-G1max.+M2+M3

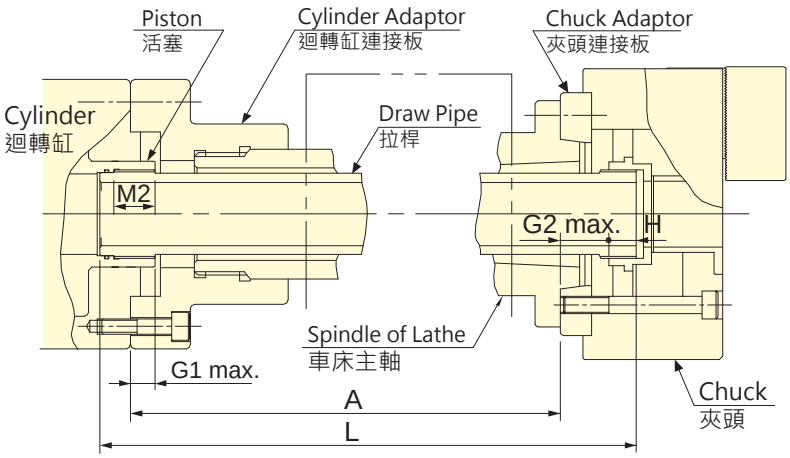

保留規格修改的權利
Subject to technical changes

技術規格 SPECIFICATIONS

夾頭規格 Chuck type		迴轉缸規格 Cylinder type	G1 max.	H	M3	M2	G2 max.	M1	H1	O1 (f7)		K max.	E min.	L
3H-12	**A8**	TK-A1291	30	23	12	35	28	M100x2	35	95	-0.036 -0.071	M100x2	5	A+56+12
3H-15	**A11**	TK-A1512	30	33	12	45	33	M130x2	45	125	-0.043 -0.083	M130x2	5	A+81+12
3H-18	**A11**	TK-A1512	30	33	12	45	33	M130x2	45	125	-0.043 -0.083	M130x2	5	A+81+12

夾頭規格 Chuck type		迴轉缸規格 Cylinder type	G1 max.	H	M3	M2	G2 max.	M1	H1	O1 (f7)		K max.	E min.	L
3H-204	**A4**	TK-A528	12	14.5	10	25	31.5	M38x1.5	20	35	-0.025 -0.05	M38x1.5	5	A+59+10
3H-205	**A4**	TK-A533	12	17	10	25	16	M38x1.5	25	35	-0.025 -0.05	M45x1.5	5	A+46+10
3H-206	**A5**	TK-A646	15	14	10	25	28	M55x2	20	50	-0.025 -0.05	M60x2	5	A+52+10
3H-208	**A6**	TK-A853	20	16.5	12	30	33.5	M60x2	20	55	-0.03 -0.06	M75x2	5	A+60+12
3H-210	**A8**	TK-A1075	25	21	12	35	28.5	M85x2	25	80	-0.03 -0.06	M95x2	5	A+59.5+12
3H-212	**A11**	TK-A1512	30	23	12	45	32	M130x2	30	125	-0.043 -0.083	M115x2	5	A+70+12
3H-215	**A8**	TK-2114	35	33	17	45	44	M155x2	40	145	-0.043 -0.083	M115x2	5	A+87+17
3H-215	**A11**	TK-2114	35	33	17	45	51	M155x2	40	145	-0.043 -0.083	M155x3	5	A+93+17
3H-215	**A15**	TK-2114	35	33	17	45	38	M155x2	40	145	-0.043 -0.083	M155x3	5	A+81+17
3H-18B	**A15**	TK-2416	35	35	17	45	45	M180x3	40	170	-0.043 -0.083	M175x3	5	A+90+17
3H-221	**A15**	TK-2416	35	34	17	45	42	M180x3	40	170	-0.043 -0.083	M190x3	5	A+86+17
3H-224	**A20**	TK-2820	51	35	17	45	42	M220x3	40	210	-0.050 -0.096	M225x3	5	A+71+17
3H-232	**A20**	TK-2820	51	37	17	45	51	M220x3	45	230	-0.050 -0.096	M295x3	5	A+82+17

註 : 2H,4H 型式之拉桿長度計算同 3H、3H-2 型式。(Note:To calculate the draw-tube length of 2H,4H as 3H,3H-2.)

中實拉桿長度計算
THE CALCULATION OF DRAW BAR LENGTH

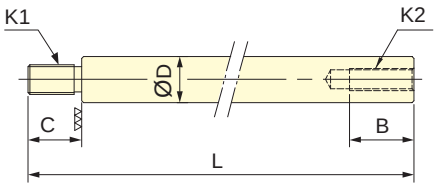

中實拉桿詳圖 Detail of Draw Bar

L=A-G1max.-G2min.-4+C

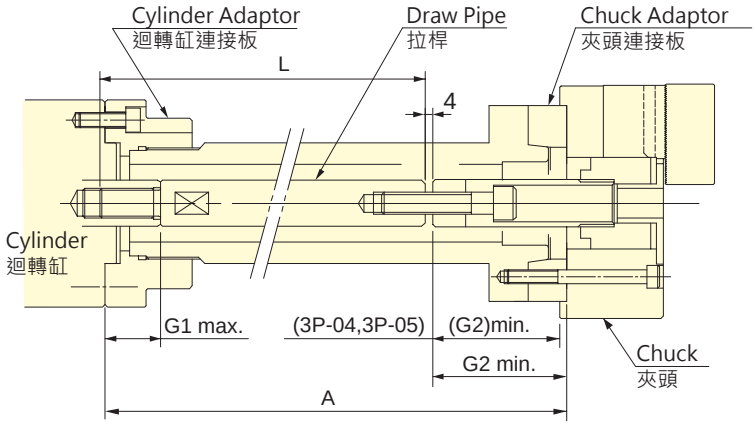

保留規格修改的權利
Subject to technical changes

技術規格 SPECIFICATIONS

夾頭型式 Chuck type	迴轉缸型式 Cylinder type	B	C	D	G1 max.	G2 min.	K1	K2	L
3P-04	RK-75(N)/RA-130	30	30/20	30/25	45	3	M20x2.5/M16x2	M10x1.5	A-22/A-32
3P-05	RK-75(N)/RA-130	40	30/20	30/25	45	-6	M20x2.5/M16x2	M12x1.75	A-13/A-23
3P-06	RK-100(N)/RA-170	40	30/25	30/25	45	81.5	M20x2.5/M16x2	M16x2	A-101/A-106
3P-08	RK-125(N)/RA-220	40	40/30	35/30	50	106	M24x3/M20x2.5	M20x2.5	A-120/A-130
3P-10	RK-125(N)/RA-220	40	40/30	35/30	50	133	M24x3/M20x2.5	M20x2.5	A-147/A-157
3P-12	RK-150(N)/RA-270	40	40/35	45/35	55	133	M30x3.5/M24x3	M20x2.5	A-152/A-157
3P-215	RK-200(N)/RH-200	60	55	55	70	69	M36x4	M30x3.5	A-88
3P-218	RK-200(N)/RH-200	60	55	55	70	57	M36x4	M30x3.5	A-76
3P-221	RK-200(N)/RH-200	60	55	55	70	62	M36x4	M30x3.5	A-81
3P-224	RK-200(N)/RH-200	60	55	55	70	62	M36x4	M30x3.5	A-81

註 :2P 型式之拉桿長度計算同 3P 型式。(Note:To calculate the draw-bar length of 2P as 3P.)

夾頭型式 Chuck type	迴轉缸型式 Cylinder type	B	C	D	G1 max.	G2 min.	K1	K2	L
3M-05	RK-75(N)	40	30	30	45	-2	M20x2.5	M12x1.75	A-17
3M-06	RK-100(N)	40	30	30	45	81.5	M20x2.5	M16x2	A-101
3M-08	RK-125(N)	40	40	35	50	106	M24x3.0	M20x2.5	A-120
3M-10	RK-150(N)	40	40	35	50	135	M24x3.0	M20x2.5	A-148
3M-12	RK-150(N)	50	40	45	55	40	M30x3.5	M24x3	A-59

註 :2M 型式之拉桿長度計算同 3M 型式。(Note:To calculate the draw-bar length of 2M as 3M.)

為精進產品品質，本公司擁有規格變更之權利，如有變更恕不另行通知。

We reserve the right to modify the specifictions without prior notice.

佳賀精機股份有限公司
AUTOGRIP MACHINERY CO., LTD.
513006 彰化縣埔心鄉明聖路一段229號
No. 229, Sec. 1, Mingsheng Rd., Puxin Township,
Changhua County 513006, Taiwan
T +886-4-822-8719
F +886-4-823-5719
E sales@autogrip.com.tw
www.autogrip.com.tw

V.2025.05TW