RD-N DOUBLE ROD ROTATING CYLINDER

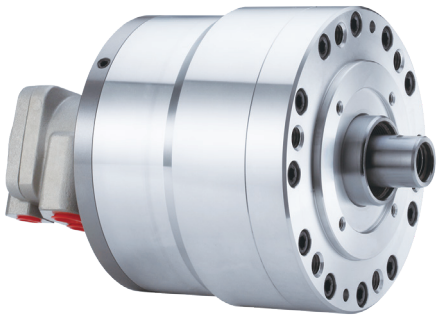

- For short form, light weight, double rod rotary cylinder.
- The drain port should be independently connected to oil tank to avoid back pressure.

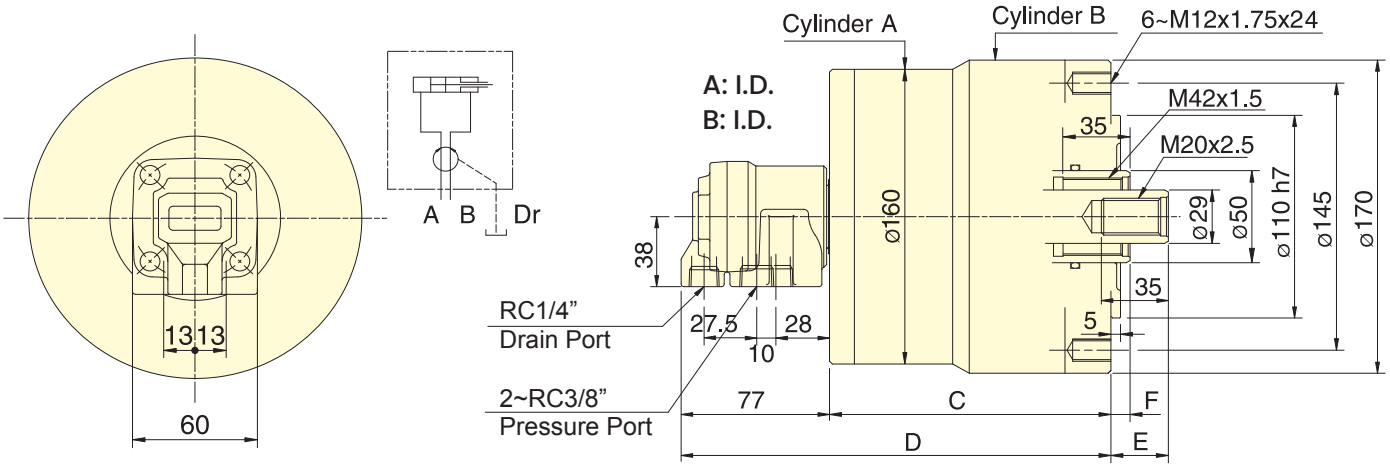

Subject to technical changes

SPECIFICATIONS

Model	Eff. piston area				Piston stroke	Max. speed	Max. pressure	I	Weight
	Extend		Retract					Moment of inertia	
	A	B	A	B					
	cm^2	cm^2	cm^2	cm^2	mm	min^{-1}(r.p.m.)	MPa(kgf/cm^2)	kg・m^2	kg
RD-120N	122.7	126.1	116.1	113.1	20	5000	3.0(30)	0.14	11.2
RD-125N	122.7	126.1	116.1	113.1	25	5000	3.0(30)	0.15	11.4

DIMENSIONS

Model	A	B	C	D	E max.	E min.	F max.	F min.
RD-120N	125	130	137	214	60	40	35	15
RD-125N	125	130	147	224	55	30	35	10